ROBO CYLINDER

Extract of ROBO CYLINDER
General Catalog 2007

# Slider Type

# RCA

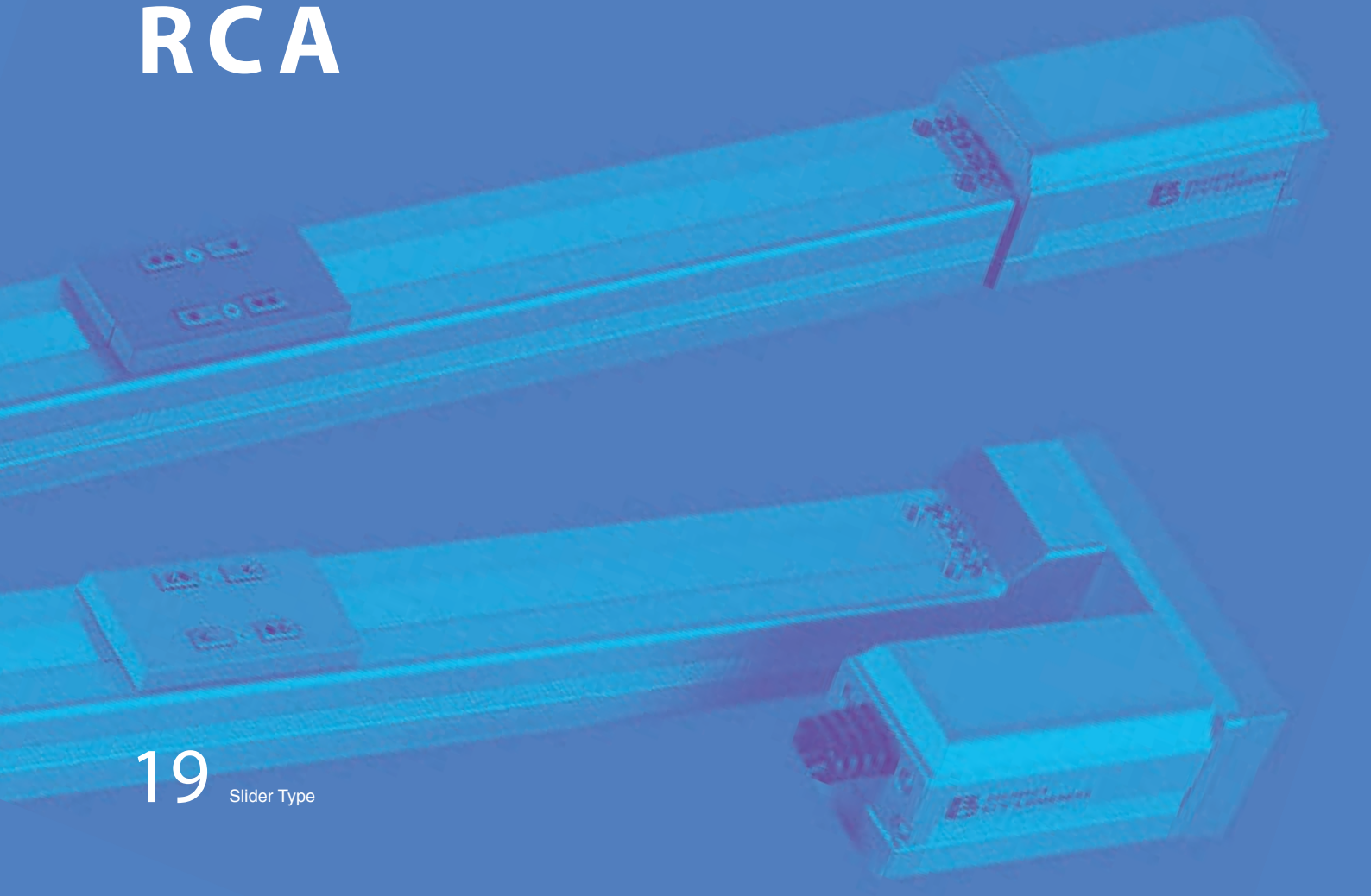

# RCA-SA4C

ROBO Cylinder, Slider Type, Actuator Width 40mm, 24-V Servo Motor, Coupling Specification

■Model Specification Items

**RCA** — **SA4C** — [ ] — **20** — [ ] — [ ] — **A1** — [ ] — [ ]

Series — Type — Encoder type — Motor type — Lead — Stroke — Applicable controller — Cable length — Options

Encoder type:
- I: Incremental specification
- A: Absolute specification

Motor type:
- 20: Servo motor 20W

Lead:
- 10: 10mm
- 5: 5mm
- 2.5: 2.5mm

Stroke:
- 50:50mm ~ 400:400mm (Set in 50-mm steps)

Applicable controller:
- A1 : ACON ASEL

Cable length:
- N : No cable
- P : 1m
- S : 3m
- M : 5m
- X□□ : Specified length
- R□□ : Robot cable

Options:
- B: Brake
- FT: Foot bracket
- HS: Home check sensor
- NM: Reversed-home specification
- SR: Slider roller specification
- SS: Slider spacer

* Refer to p. 31 of the front matter for details on the model specification items.

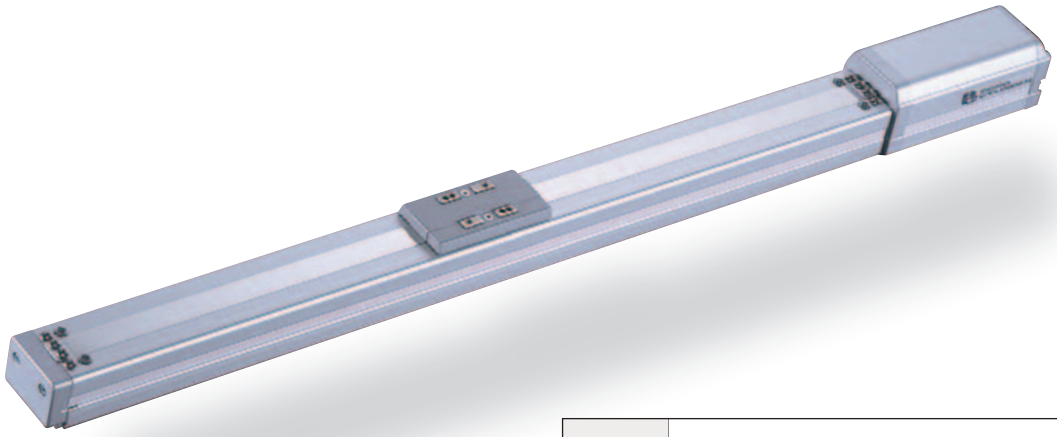

**POINT Selection Points**

(1) When the stroke increases, the maximum speed will drop to prevent the ball screw from reaching a critical speed. Use the actuator specification table below to check the maximum speed at the stroke you desire.
(2) The load capacity is based on operation at an acceleration of 0.3 G (or 0.2 G if the lead is 2.5). This is the maximum acceleration.

## Actuator Specifications

### ■ Lead and Load Capacity

| Model | Motor output (W) | Lead (mm) | Maximum load capacity (Note 1) Horizontal (kg) | Maximum load capacity (Note 1) Vertical (kg) | Rated thrust (N) | Stroke (mm) |
|---|---|---|---|---|---|---|
| RCA-SA4C-①-20-10-②-A1-③-④ | 20 | 10 | 4 | 1 | 19.6 | 50 ~ 400 (Set in 50-mm steps) |
| RCA-SA4C-①-20-5-②-A1-③-④ | | 5 | 6 | 2.5 | 39.2 | |
| RCA-SA4C-①-20-2.5-②-A1-③-④ | | 2.5 | 8 | 4.5 | 78.4 | |

Explanation of numbers ① Encoder type ② Stroke ③ Cable length ④ Options

### ■ Stroke and Maximum Speed

| Lead \ Stroke | 50 ~ 400 (Set in 50-mm steps) |
|---|---|
| 10 | 665 |
| 5 | 330 |
| 2.5 | 165 |

(Unit: mm/s)

## Actuator Specifications

| Item | Description |
|---|---|
| Drive method | Ball screw ø8mm, rolled C10 |
| Positioning repeatability | ±0.02mm |
| Backlash | 0.1mm or less |
| Base | Material: Aluminum with special alumite treatment |
| Allowable load moment | Ma : 2.7N • m Mb : 3.9N • m Mc : 6.8N • m |
| Overhang load length | Ma direction: 120mm or less, Mb/Mc directions: 120mm or less |
| Ambient operating temperature, humidity | 0~40°C, 85% RH or below (non-condensing) |

Direction of allowable load moment

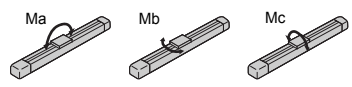


Overhang load length

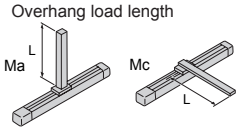

## Dimensions

You can download CAD drawings from our website. www.iai-robot.co.jp

2D CAD

*1 Connect the motor/encoder cables. Refer to p. 324 for details on the cables.
*2 The slider moves to the ME during home return. Pay attention to prevent contact between the slider and surrounding parts.
ME: Mechanical end SE: Stroke end
*3 Reference position for calculating Ma moment
*4 If the actuator is affixed using only the mounting holes provided in the top face of the base, the base may twist to cause abnormal sliding of the slider or generate noise. When the mounting holes in the top face of the base are used, keep the stroke to 200 mm or less.

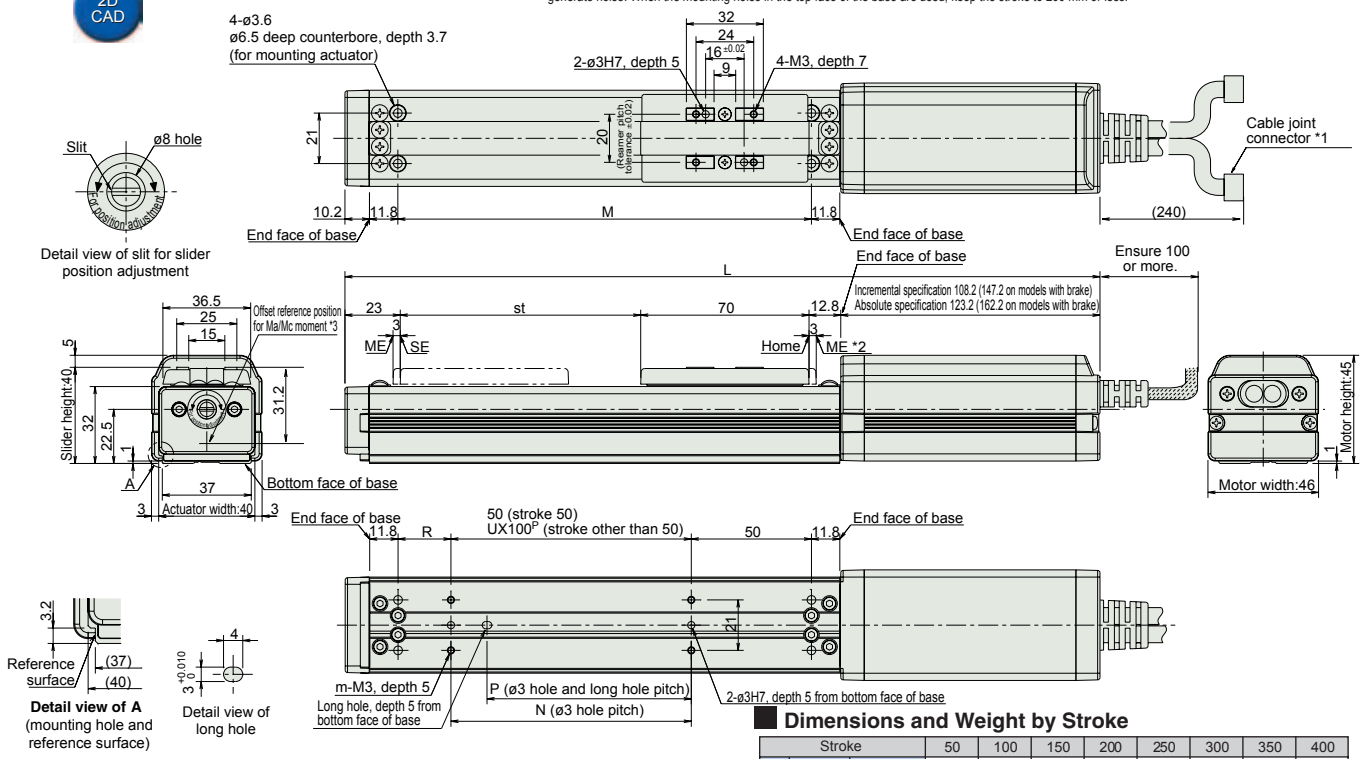


### Dimensions and Weight by Stroke

| Stroke | | | 50 | 100 | 150 | 200 | 250 | 300 | 350 | 400 |
|---|---|---|---|---|---|---|---|---|---|---|
| L | Incremental | Without brake | 264 | 314 | 364 | 414 | 464 | 514 | 564 | 614 |
| | | With brake | 303 | 353 | 403 | 453 | 503 | 553 | 603 | 653 |
| | Absolute | Without brake | 279 | 329 | 379 | 429 | 479 | 529 | 579 | 629 |
| | | With brake | 318 | 368 | 418 | 468 | 518 | 568 | 618 | 668 |
| M | | | 122 | 172 | 222 | 272 | 322 | 372 | 422 | 472 |
| N | | | 50 | 100 | 100 | 200 | 200 | 300 | 300 | 400 |
| P | | | 35 | 85 | 85 | 185 | 185 | 285 | 285 | 385 |
| R | | | 22 | 22 | 72 | 22 | 72 | 22 | 72 | 22 |
| U | | | – | 1 | 1 | 2 | 2 | 3 | 3 | 4 |
| m | | | 4 | 4 | 4 | 6 | 6 | 8 | 8 | 10 |
| Weight (kg) | | | 0.7 | 0.8 | 0.9 | 1 | 1.1 | 1.2 | 1.3 | 1.4 |

# Controller

## Applicable Controllers

RCA series actuators can be operated using the following controllers. Choose the type that best suits your specific purpose.

| Name | External view | Model | Features | Maximum number of positioning points | Input power supply | Power-supply capacity | Reference page |
|---|---|---|---|---|---|---|---|
| Positioner type | | ACON-C-20I-NP-2-0 | Supporting up to 512 positioning points | 512 points | DC24V | Rating: 1.3A Peak: 3.7A | →P315 |
| Positioner type meeting safety category | | ACON-CG-20I-NP-2-0 | | | | | |
| Solenoid valve type | | ACON-CY-20I-NP-2-0 | Same control actions as those applicable to solenoid valves | 3 points | | | |
| Pulse-train input type (differential line driver specification) | | ACON-PL-20I-NP-2-0 | Pulse-train input type supporting a differential line driver | ( - ) | | | |
| Pulse-train input type (open collector specification) | | ACON-PO-20I-NP-2-0 | Pulse-train input type supporting an open collector | | | | |
| Serial communication type | | ACON-SE-20I-NP-0-0 | Dedicated serial communication type | 64 points | | | |
| Program control type | | ASEL-C-1-20①-NP-2-0 | Programmable type capable of operating up to 2 axes | 1500 points | | | →P345 |

* The ASEL model name is based on a 1-axis specification.
*① indicates the encoder type (I: Incremental / A: Absolute).

# RCA-SA5C

ROBO Cylinder, Slider Type, Actuator Width 52mm, 24-V Servo Motor, Coupling Specification

■Model Specification Items

**RCA** – **SA5C** – [ ] – **20** – [ ] – [ ] – **A1** – [ ] – [ ]

- Series: RCA
- Type: SA5C
- Encoder type: I: Incremental specification; A: Absolute specification
- Motor type: 20: Servo motor 20W
- Lead: 12: 12mm; 6: 6mm; 3: 3mm
- Stroke: 50:50mm ~ 500:500mm (Set in 50-mm steps)
- Applicable controller: A1: ACON ASEL
- Cable length: N: No cable; P: 1m; S: 3m; M: 5m; X□□: Specified length; R□□: Robot cable
- Options: B: Brake; FT: Foot bracket; HS: Home check sensor; NM: Reversed-home specification; SR: Slider roller specification

* Refer to p. 31 of the front matter for details on the model specification items.

**POINT Selection Points**

(1) When the stroke increases, the maximum speed will drop to prevent the ball screw from reaching a critical speed. Use the actuator specification table below to check the maximum speed at the stroke you desire.
(2) The load capacity is based on operation at an acceleration of 0.3 G (or 0.2 G if the lead is 3). This is the maximum acceleration.

## Actuator Specifications

### ■Lead and Load Capacity

| Model | Motor output (W) | Lead (mm) | Maximum load capacity (Note 1) Horizontal (kg) | Maximum load capacity (Note 1) Vertical (kg) | Rated thrust (N) | Stroke (mm) |
|---|---|---|---|---|---|---|
| RCA-SA5C-①-20-12-②-A1-③-④ | 20 | 12 | 4 | 1 | 16.7 | 50 ~ 500 (Set in 50-mm steps) |
| RCA-SA5C-①-20-6-②-A1-③-④ | | 6 | 6 | 2 | 33.3 | |
| RCA-SA5C-①-20-3-②-A1-③-④ | | 3 | 12 | 4 | 65.7 | |

Explanation of numbers ① Encoder type ② Stroke ③ Cable length ④ Options

### ■Stroke and Maximum Speed

| Lead \ Stroke | 50 ~ 450 (Set in 50-mm steps) | 500 (mm) |
|---|---|---|
| 12 | 800 | 760 |
| 6 | 400 | 380 |
| 3 | 200 | 190 |

(Unit: mm/s)

## Actuator Specifications

| Item | Description |
|---|---|
| Drive method | Ball screw ø10mm, rolled C10 |
| Positioning repeatability | ±0.02mm |
| Backlash | 0.1mm or less |
| Base | Material: Aluminum with special alumite treatment |
| Allowable load moment | Ma : 4.9N • m Mb : 6.8N • m Mc : 11.7N • m |
| Overhang load length | Ma direction: 150mm or less, Mb/Mc directions: 150mm or less |
| Ambient operating temperature, humidity | 0~40°C, 85% RH or below (non-condensing) |

Direction of allowable load moment

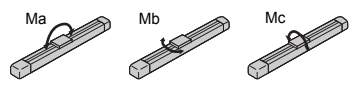


Overhang load length

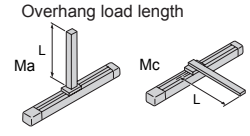

## Dimensions

You can download CAD drawings from our website. www.iai-robot.co.jp

2D CAD

*1 Connect the motor/encoder cables. Refer to p. 324 for details on the cables.
*2 The slider moves to the ME during home return. Pay attention to prevent contact between the slider and surrounding parts.
ME: Mechanical end SE: Stroke end
*3 Reference position for calculating Ma moment
*4 If the actuator is affixed using only the mounting holes provided in the top face of the base, the base may twist to cause abnormal sliding of the slider or generate noise. When the mounting holes in the top face of the base are used, keep the stroke to 200 mm or less.

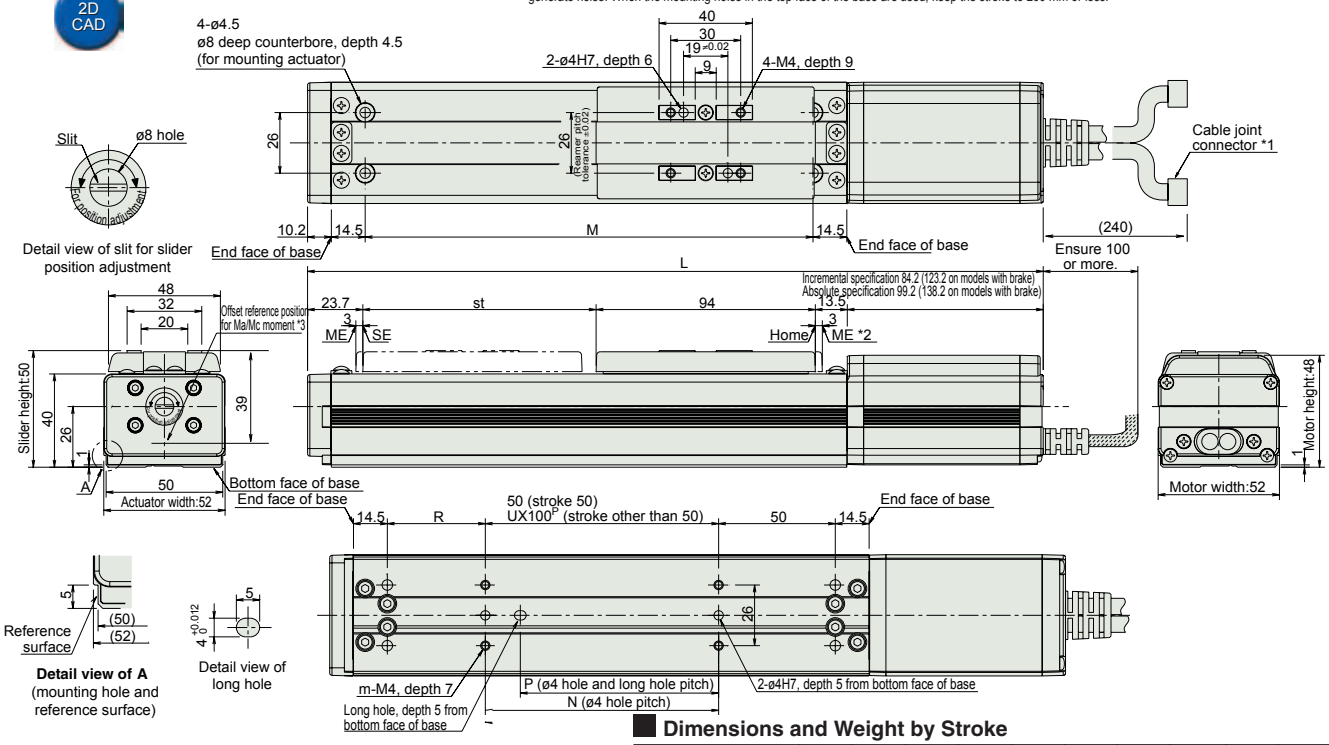


### Dimensions and Weight by Stroke

| Stroke | | | 50 | 100 | 150 | 20 | 50 | 300 | 350 | 400 | 450 | 500 |
|---|---|---|---|---|---|---|---|---|---|---|---|---|
| L | Incremental | Without brake | 265.4 | 315.4 | 365.4 | 415.4 | 465.4 | 515.4 | 565.4 | 615.4 | 665.4 | 715.4 |
| | | With brake | 304.4 | 354.4 | 404.4 | 454.4 | 504.4 | 554.4 | 604.4 | 654.4 | 704.4 | 754.4 |
| | Absolute | Without brake | 280.4 | 330.4 | 380.4 | 430.4 | 480.4 | 530.4 | 580.4 | 630.4 | 680.4 | 730.4 |
| | | With brake | 319.4 | 369.4 | 419.4 | 469.4 | 519.4 | 569.4 | 619.4 | 669.4 | 719.4 | 769.4 |
| M | | | 142 | 192 | 242 | 292 | 342 | 392 | 442 | 492 | 542 | 592 |
| N | | | 50 | 100 | 100 | 200 | 200 | 300 | 300 | 400 | 400 | 500 |
| P | | | 35 | 85 | 85 | 185 | 185 | 285 | 285 | 385 | 385 | 485 |
| R | | | 92 | 42 | 92 | 42 | 92 | 42 | 92 | 42 | 92 | 42 |
| U | | | – | 1 | 1 | 2 | 2 | 3 | 3 | 4 | 4 | 5 |
| m | | | 4 | 4 | 4 | 6 | 6 | 8 | 8 | 10 | 10 | 12 |
| Weight (kg) | | | 1.3 | 1.4 | 1.5 | 1.6 | 1.7 | 1.8 | 1.9 | 2 | 2.1 | 2.2 |

# Controller

## Applicable Controllers

RCA series actuators can be operated using the following controllers. Choose the type that best suits your specific purpose.

| Name | External view | Model | Features | Maximum number of positioning points | Input power supply | Power-supply capacity | Reference page |
|---|---|---|---|---|---|---|---|
| Positioner type | | ACON-C-20I-NP-2-0 | Supporting up to 512 positioning points | 512 points | DC24V | Rating: 1.3A Peak: 3.7A | →P315 |
| Positioner type meeting safety category | | ACON-CG-20I-NP-2-0 | | | | | |
| Solenoid valve type | | ACON-CY-20I-NP-2-0 | Same control actions as those applicable to solenoid valves | 3 points | | | |
| Pulse-train input type (differential line driver specification) | | ACON-PL-20I-NP-2-0 | Pulse-train input type supporting a differential line driver | ( - ) | | | |
| Pulse-train input type (open collector specification) | | ACON-PO-20I-NP-2-0 | Pulse-train input type supporting an open collector | | | | |
| Serial communication type | | ACON-SE-20I-NP-0-0 | Dedicated serial communication type | 64 points | | | |
| Program control type | | ASEL-C-1-20①-NP-2-0 | Programmable type capable of operating up to 2 axes | 1500 points | | | →P345 |

* The ASEL model name is based on a 1-axis specification.
*① indicates the encoder type (I: Incremental / A: Absolute).

# RCA-SA6C

ROBO Cylinder, Slider Type, Actuator Width 58mm, 24-V Servo Motor, Coupling Specification

■Model Specification Items

**RCA** — **SA6C** — [ ] — **30** — [ ] — [ ] — **A1** — [ ] — [ ]

- Series: RCA
- Type: SA6C
- Encoder type: I: Incremental specification; A: Absolute specification
- Motor type: 30: Servo motor 30W
- Lead: 12: 12mm; 6: 6mm; 3: 3mm
- Stroke: 50:50mm ~ 600:600mm (Set in 50-mm steps)
- Applicable controller: A1 : ACON, ASEL
- Cable length: N : No cable; P : 1m; S : 3m; M : 5m; X□□ : Specified length; R□□ : Robot cable
- Options: B: Brake; FT: Foot bracket; HS: Home check sensor; NM: Reversed-home specification; SR: Slider roller specification

* Refer to p. 31 of the front matter for details on the model specification items.

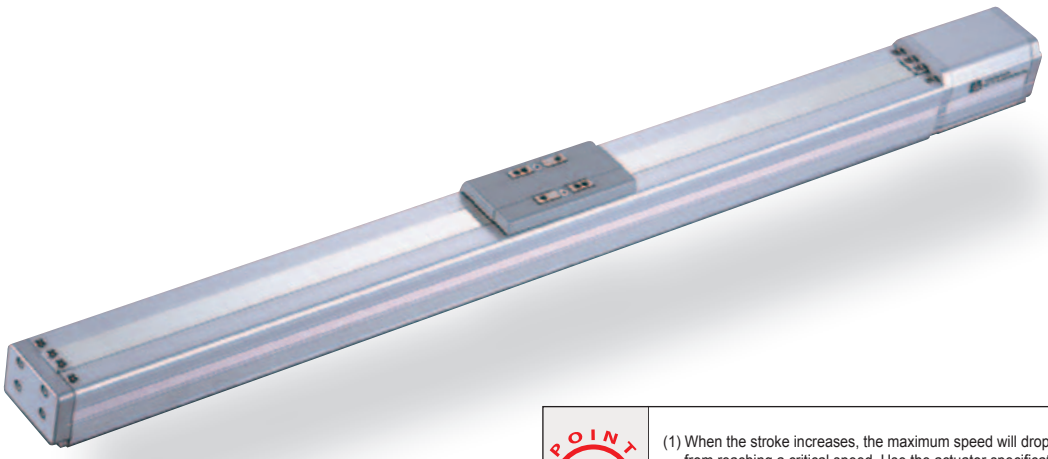

**POINT — Selection Points**

(1) When the stroke increases, the maximum speed will drop to prevent the ball screw from reaching a critical speed. Use the actuator specification table below to check the maximum speed at the stroke you desire.
(2) The load capacity is based on operation at an acceleration of 0.3 G (or 0.2 G if the lead is 3). This is the maximum acceleration.

## Actuator Specifications

### ■Lead and Load Capacity

| Model | Motor output (W) | Lead (mm) | Maximum load capacity (Note 1) Horizontal (kg) | Maximum load capacity (Note 1) Vertical (kg) | Rated thrust (N) | Stroke (mm) |
|---|---|---|---|---|---|---|
| RCA-SA6C-①-30-12-②-A1-③-④ | 30 | 12 | 4 | 1.5 | 24.2 | 50 ~ 600 (Set in 50-mm steps) |
| RCA-SA6C-①-30-6-②-A1-③-④ | | 6 | 6 | 3 | 48.4 | |
| RCA-SA6C-①-30-3-②-A1-③-④ | | 3 | 12 | 6 | 96.8 | |

Explanation of numbers ① Encoder type ② Stroke ③ Cable length ④ Options

### ■Stroke and Maximum Speed

| Lead \ Stroke | 50 ~ 450 (Set in 50-mm steps) | 500 (mm) | 550 (mm) | 600 (mm) |
|---|---|---|---|---|
| 10 | 800 | 760 | 640 | 540 |
| 5 | 400 | 380 | 320 | 270 |
| 2.5 | 200 | 190 | 160 | 135 |

(Unit: mm/s)

## Actuator Specifications

| Item | Description |
|---|---|
| Drive method | Ball screw ø10mm, rolled C10 |
| Positioning repeatability | ±0.02mm |
| Backlash | 0.1mm or less |
| Base | Material: Aluminum with special alumite treatment |
| Allowable load moment | Ma : 8.9N • m Mb : 12.7N • m Mc : 18.6N • m |
| Overhang load length | Ma direction: 220mm or less, Mb/Mc directions: 220mm or less |
| Ambient operating temperature, humidity | 0~40°C, 85% RH or below (non-condensing) |

Direction of allowable load moment

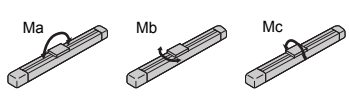


Overhang load length

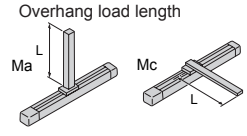

## Dimensions

You can download CAD drawings from our website. www.iai-robot.co.jp

2D CAD

*1 Connect the motor/encoder cables. Refer to p. 324 for details on the cables.
*2 The slider moves to the ME during home return. Pay attention to prevent contact between the slider and surrounding parts.
ME: Mechanical end SE: Stroke end
*3 Reference position for calculating Ma moment
*4 If the actuator is affixed using only the mounting holes provided in the top face of the base, the base may twist to cause abnormal sliding of the slider or generate noise. When the mounting holes in the top face of the base are used, keep the stroke to 200 mm or less.

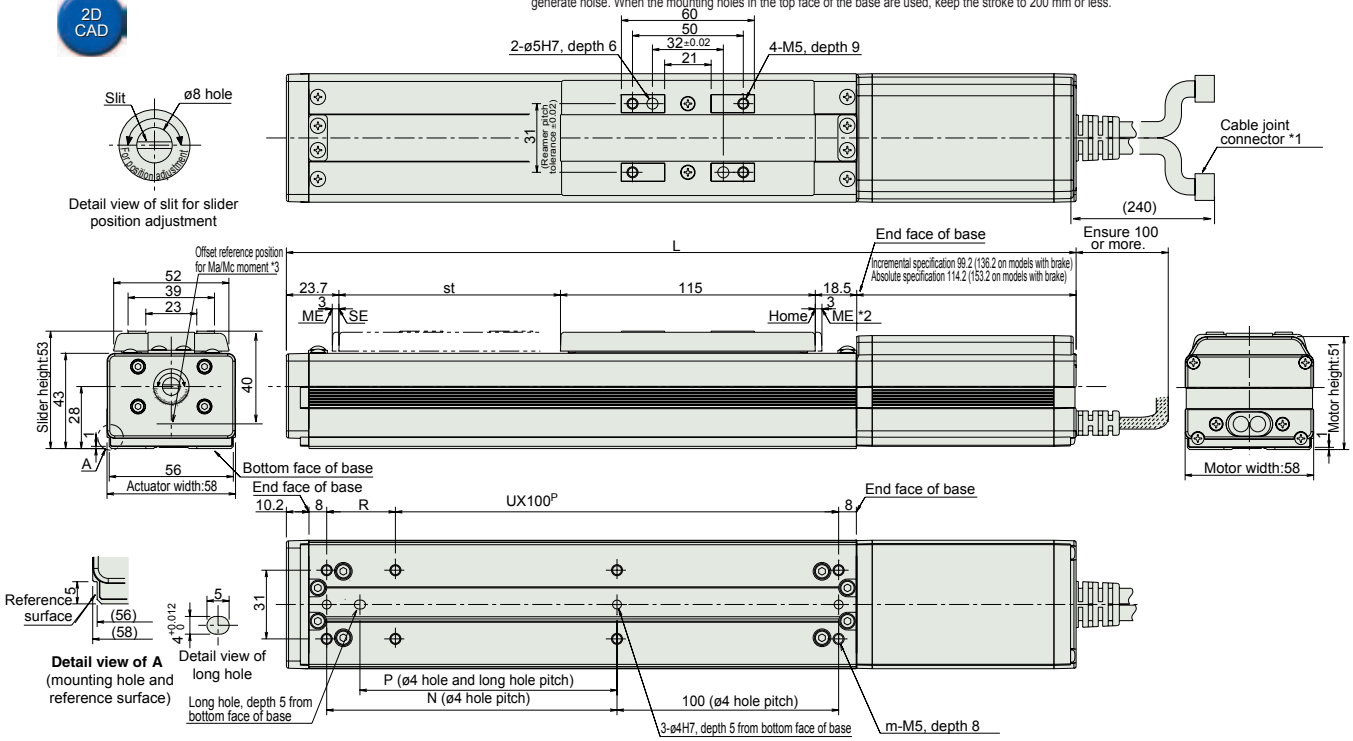


### Dimensions and Weight by Stroke

| Stroke | | | 50 | 100 | 150 | 20 | 50 | 300 | 350 | 400 | 450 | 500 | 550 | 600 |
|---|---|---|---|---|---|---|---|---|---|---|---|---|---|---|
| L | Incremental | Without brake | 306.4 | 356.4 | 406.4 | 456.4 | 506.4 | 556.4 | 606.4 | 656.4 | 706.4 | 756.4 | 806.4 | 856.4 |
| | | With brake | 345.4 | 395.4 | 445.4 | 495.4 | 545.4 | 595.4 | 645.4 | 695.4 | 745.4 | 795.4 | 845.4 | 895.4 |
| | Absolute | Without brake | 321.4 | 371.4 | 421.4 | 471.4 | 521.4 | 571.4 | 621.4 | 671.4 | 721.4 | 771.4 | 821.4 | 871.4 |
| | | With brake | 360.4 | 410.4 | 460.4 | 510.4 | 560.4 | 610.4 | 660.4 | 710.4 | 760.4 | 810.4 | 860.4 | 910.4 |
| N | | | 81 | 131 | 181 | 231 | 281 | 331 | 381 | 431 | 481 | 531 | 581 | 631 |
| P | | | 66 | 116 | 166 | 216 | 266 | 316 | 366 | 416 | 466 | 516 | 566 | 616 |
| R | | | 81 | 31 | 81 | 31 | 81 | 31 | 81 | 31 | 81 | 31 | 81 | 31 |
| U | | | 1 | 2 | 2 | 3 | 3 | 4 | 4 | 5 | 5 | 6 | 6 | 7 |
| m | | | 6 | 8 | 8 | 10 | 10 | 12 | 12 | 14 | 14 | 16 | 16 | 18 |
| Weight (kg) | | | 1.4 | 1.6 | 1.8 | 2 | 2.2 | 2.4 | 2.6 | 2.8 | 3 | 3.2 | 3.4 | 3.6 |

# Controller

## Applicable Controllers

RCA series actuators can be operated using the following controllers. Choose the type that best suits your specific purpose.

| Name | External view | Model | Features | Maximum number of positioning points | Input power supply | Power-supply capacity | Reference page |
|---|---|---|---|---|---|---|---|
| Positioner type | | ACON-C-30I-NP-2-0 | Supporting up to 512 positioning points | 512 points | DC24V | Rating: 1.3A Peak: 4.2A | →P315 |
| Positioner type meeting safety category | | ACON-CG-30I-NP-2-0 | | | | | |
| Solenoid valve type | | ACON-CY-30I-NP-2-0 | Same control actions as those applicable to solenoid valves | 3 points | | | |
| Pulse-train input type (differential line driver specification) | | ACON-PL-30I-NP-2-0 | Pulse-train input type supporting a differential line driver | ( - ) | | | |
| Pulse-train input type (open collector specification) | | ACON-PO-30I-NP-2-0 | Pulse-train input type supporting an open collector | | | | |
| Serial communication type | | ACON-SE-30I-NP-0-0 | Dedicated serial communication type | 64 points | | | |
| Program control type | | ASEL-C-1-30①-NP-2-0 | Programmable type capable of operating up to 2 axes | 1500 points | | | →P345 |

* The ASEL model name is based on a 1-axis specification.
*① indicates the encoder type (I: Incremental / A: Absolute).

# RCA-SA4D

ROBO Cylinder, Slider Type, Actuator Width 40mm, 24-V Servo Motor
Built-In (Direct-Coupled) Motor Specification

■Model Specification Items

**RCA** — **SA4D** — [ ] — **20** — [ ] — [ ] — **A1** — [ ] — [ ]

- Series: RCA
- Type: SA4D
- Encoder type: I: Incremental specification; A: Absolute specification
- Motor type: 20: Servo motor 20W
- Lead: 10:10mm; 5: 5mm; 2.5:2.5mm
- Stroke: 50:50mm ~ 300:300mm (Set in 50-mm steps)
- Applicable controller: A1: ACON, ASEL
- Cable length: N: No cable; P: 1m; S: 3m; M: 5m; X□□: Specified length; R□□: Robot cable
- Options: BE: Brake (wire taken out from end); BL: Brake (wire taken out from left); BR: Brake (wire taken out from right); FT: Foot bracket; NM: Reversed-home specification

* Refer to p. 31 of the front matter for details on the model specification items.

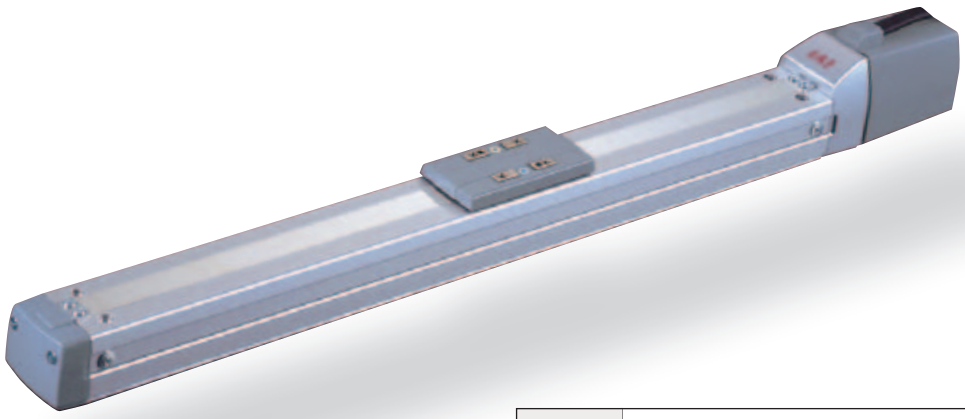

**POINT Selection Points**

(1) When the stroke increases, the maximum speed will drop to prevent the ball screw from reaching a critical speed. Use the actuator specification table below to check the maximum speed at the stroke you desire.
(2) The load capacity is based on operation at an acceleration of 0.3 G (or 0.2 G if the lead is 2.5). This is the maximum acceleration.

## Actuator Specifications

### ■Lead and Load Capacity

| Model | Motor output (W) | Lead (mm) | Maximum load capacity (Note 1) Horizontal (kg) | Maximum load capacity (Note 1) Vertical (kg) | Rated thrust (N) | Stroke (mm) |
|---|---|---|---|---|---|---|
| RCA-SA4D-①-20-10-②-A1-③-④ | 20 | 10 | 4 | 1 | 19.6 | 50 ~ 300 (Set in 50-mm steps) |
| RCA-SA4D-①-20-5-②-A1-③-④ | | 5 | 6 | 2.5 | 39.2 | |
| RCA-SA4D-①-20-2.5-②-A1-③-④ | | 2.5 | 8 | 4.5 | 78.4 | |

Explanation of numbers ① Encoder type ② Stroke ③ Cable length ④ Options

### ■Stroke and Maximum Speed

| Lead \ Stroke | 50 ~ 300 (Set in 50-mm steps) |
|---|---|
| 10 | 665 |
| 5 | 330 |
| 2.5 | 165 |

(Unit: mm/s)

## Actuator Specifications

| Item | Description |
|---|---|
| Drive method | Ball screw ø8mm, rolled C10 |
| Positioning repeatability | ±0.02mm |
| Backlash | 0.1mm or less |
| Base | Material: Aluminum with special alumite treatment |
| Allowable load moment | Ma : 2.7N • m Mb : 3.9N • m Mc : 6.8N • m |
| Overhang load length | Ma direction: 120mm or less, Mb/Mc directions: 120mm or less |
| Ambient operating temperature, humidity | 0~40°C, 85% RH or below (non-condensing) |

Direction of allowable load moment

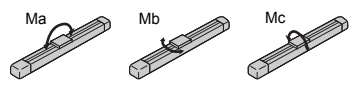


Overhang load length

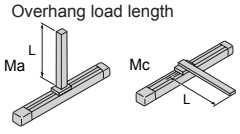

## Dimensions

You can download CAD drawings from our website. www.iai-robot.co.jp

2D CAD

* To change the home direction, the actuator must be returned to IAI for adjustment.
* With the reversed-home specification (NM), the home is positioned at approx. 2.2 mm toward the motor from the ME on the counter-motor side.

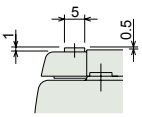


Detail view of A

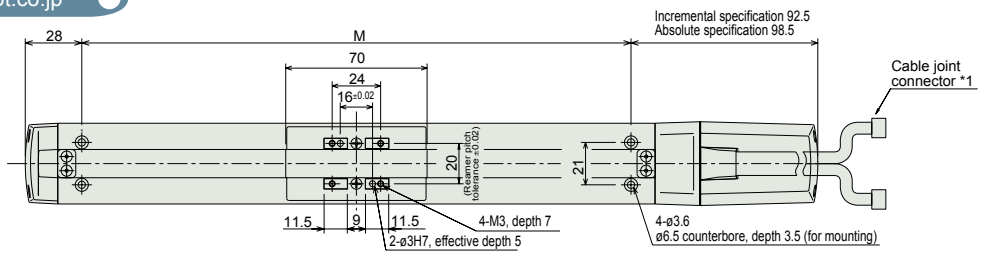


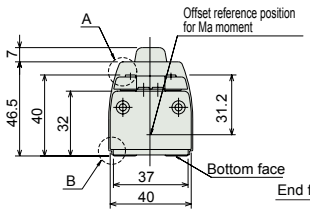


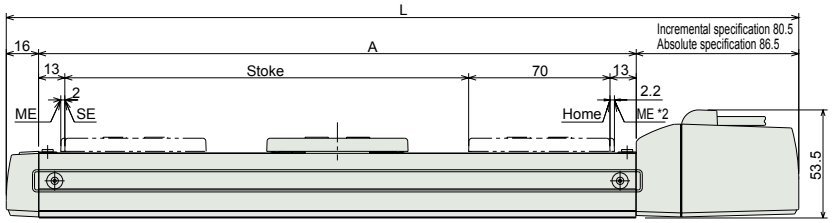


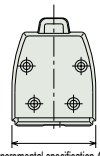


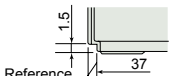


**Detail view of B**
(mounting hole and reference surface)

Detail view of long hole

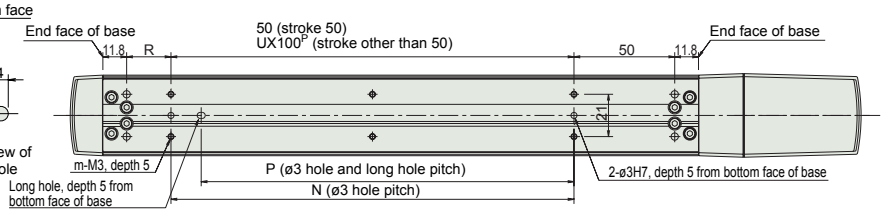


*1 Connect the motor/encoder cables. Refer to p. 324 for details on the cables.
*2 The slider moves to the ME during home return. Pay attention to prevent contact between the slider and surrounding parts.
ME: Mechanical end SE: Stroke end

### Brake dimensions

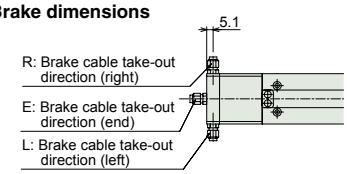


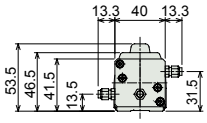


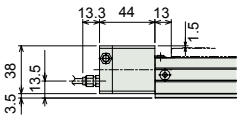


* Models with brake have their overall length (L) extended by 28 mm (or 41.3 mm if the wire is taken out from the end) and weight increased by 0.2 kg.

### Dimensions and Weight by Stroke

| Stroke | | 50 | 100 | 150 | 200 | 250 | 300 |
|---|---|---|---|---|---|---|---|
| L | Incremental | 242.5 | 292.5 | 342.5 | 392.5 | 442.5 | 492.5 |
| | Absolute | 248.5 | 298.5 | 348.5 | 398.5 | 448.5 | 498.5 |
| A | | 146 | 196 | 246 | 296 | 346 | 396 |
| M | | 122 | 172 | 222 | 272 | 322 | 372 |
| N | | 50 | 100 | 100 | 200 | 200 | 300 |
| P | | 35 | 85 | 85 | 185 | 185 | 285 |
| R | | 22 | 22 | 72 | 22 | 72 | 22 |
| U | | – | 1 | 1 | 2 | 2 | 3 |
| m | | 4 | 4 | 4 | 6 | 6 | 8 |
| Weight (kg) | | 0.6 | 0.7 | 0.8 | 0.9 | 1.0 | 1.1 |

# Controller

## Applicable Controllers

RCA series actuators can be operated using the following controllers. Choose the type that best suits your specific purpose.

| Name | External view | Model | Features | Maximum number of positioning points | Input power supply | Power-supply capacity | Reference page |
|---|---|---|---|---|---|---|---|
| Positioner type | | ACON-C-20I-NP-2-0 | Supporting up to 512 positioning points | 512 points | DC24V | Rating: 1.3A Peak: 3.7A | →P315 |
| Positioner type meeting safety category | | ACON-CG-20I-NP-2-0 | | | | | |
| Solenoid valve type | | ACON-CY-20I-NP-2-0 | Same control actions as those applicable to solenoid valves | 3 points | | | |
| Pulse-train input type (differential line driver specification) | | ACON-PL-20I-NP-2-0 | Pulse-train input type supporting a differential line driver | ( - ) | | | |
| Pulse-train input type (open collector specification) | | ACON-PO-20I-NP-2-0 | Pulse-train input type supporting an open collector | | | | |
| Serial communication type | | ACON-SE-20I-NP-0-0 | Dedicated serial communication type | 64 points | | | |
| Program control type | | ASEL-C-1-20①-NP-2-0 | Programmable type capable of operating up to 2 axes | 1500 points | | | →P345 |

* The ASEL model name is based on a 1-axis specification.
*① indicates the encoder type (I: Incremental / A: Absolute).

# RCA-SA5D

ROBO Cylinder, Slider Type, Actuator Width 52mm, 24-V Servo Motor
Built-In (Direct-Coupled) Motor Specification

■Model Specification Items

**RCA** — **SA5D** — [ ] — **20** — [ ] — [ ] — **A1** — [ ] — [ ]

- Series: RCA
- Type: SA5D
- Encoder type: I: Incremental specification; A: Absolute specification
- Motor type: 20: Servo motor 20W
- Lead: 12: 12mm; 6: 6mm; 3: 3mm
- Stroke: 50:50mm ~ 500:500mm (Set in 50-mm steps)
- Applicable controller: A1 : ACON, ASEL
- Cable length: N : No cable; P : 1m; S : 3m; M : 5m; X□□ : Specified length; R□□ : Robot cable
- Options: BE : Brake (wire taken out from end); BL : Brake (wire taken out from left); BR : Brake (wire taken out from right); FT : Foot bracket; NM : Reversed-home specification; SR : Slider roller specification

* Refer to p. 31 of the front matter for details on the model specification items.

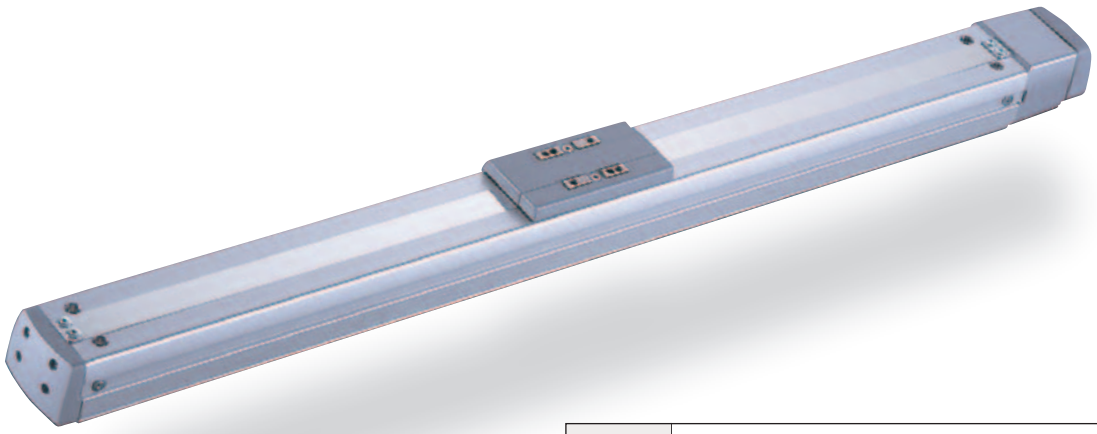

**POINT Selection Points**

(1) When the stroke increases, the maximum speed will drop to prevent the ball screw from reaching a critical speed. Use the actuator specification table below to check the maximum speed at the stroke you desire.
(2) The load capacity is based on operation at an acceleration of 0.3 G (or 0.2 G if the lead is 3). This is the maximum acceleration.

## Actuator Specifications

### ■Lead and Load Capacity

| Model | Motor output (W) | Lead (mm) | Maximum load capacity (Note 1) Horizontal (kg) | Maximum load capacity (Note 1) Vertical (kg) | Rated thrust (N) | Stroke (mm) |
|---|---|---|---|---|---|---|
| RCA-SA5D-①-20-12-②-A1-③-④ | 20 | 12 | 4 | 1 | 16.7 | 50 ~ 500 (Set in 50-mm steps) |
| RCA-SA5D-①-20-6-②-A1-③-④ | | 6 | 6 | 2 | 33.3 | |
| RCA-SA5D-①-20-3-②-A1-③-④ | | 3 | 12 | 4 | 65.7 | |

Explanation of numbers ① Encoder type ② Stroke ③ Cable length ④ Options

### ■Stroke and Maximum Speed

| Lead \ Stroke | 50 ~ 450 (Set in 50-mm steps) | 500 (mm) |
|---|---|---|
| 12 | 800 | 760 |
| 6 | 400 | 380 |
| 3 | 200 | 190 |

(Unit: mm/s)

## Actuator Specifications

| Item | Description |
|---|---|
| Drive method | Ball screw ø10mm, rolled C10 |
| Positioning repeatability | ±0.02mm |
| Backlash | 0.1mm or less |
| Base | Material: Aluminum with special alumite treatment |
| Allowable load moment | Ma : 4.9N • m Mb : 6.8N • m Mc : 11.7N • m |
| Overhang load length | Ma direction: 150mm or less, Mb/Mc directions: 150mm or less |
| Ambient operating temperature, humidity | 0~40°C, 85% RH or below (non-condensing) |

Direction of allowable load moment

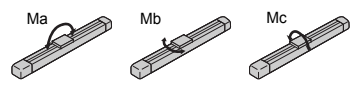


Overhang load length

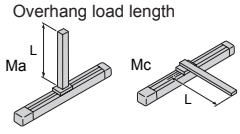

## Dimensions

You can download CAD drawings from our website. www.iai-robot.co.jp

2D CAD

*1 Connect the motor/encoder cables. Refer to p. 324 for details on the cables.
*2 The slider moves to the ME during home return. Pay attention to prevent contact between the slider and surrounding parts.
ME: Mechanical end SE: Stroke end

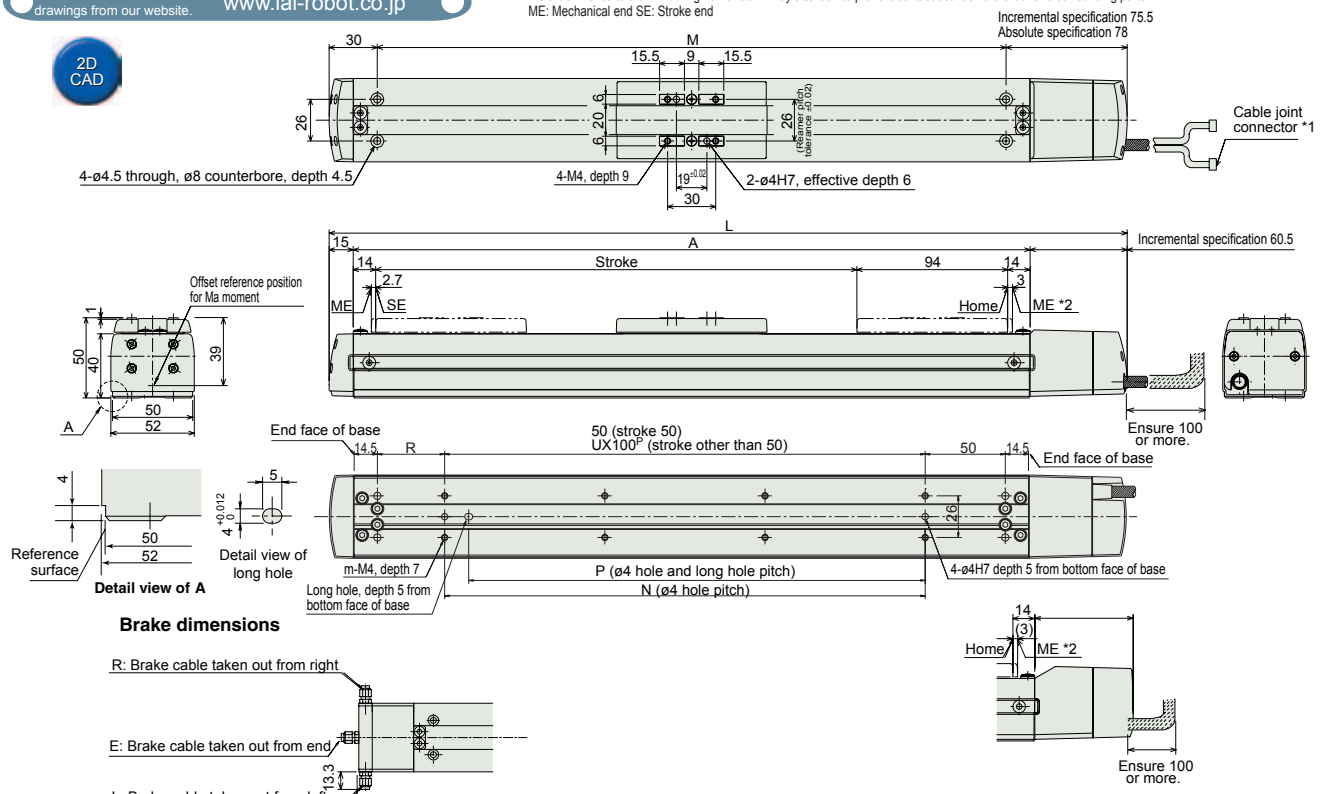


### Brake dimensions

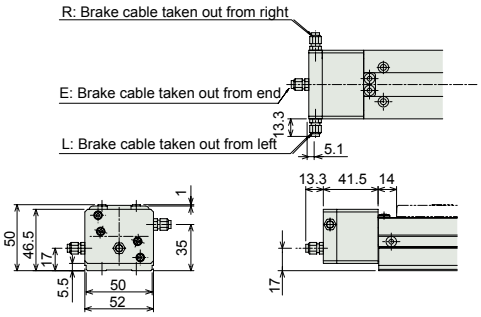


* Models with brake have their overall length (L) extended by 26.5 mm (or 39.8 mm if the wire is taken out from the end) and weight increased by 0.3 kg.

### Dimensions and Weight by Stroke

| Stroke | | 50 | 100 | 150 | 200 | 250 | 300 | 350 | 400 | 450 | 500 |
|---|---|---|---|---|---|---|---|---|---|---|---|
| L | Incremental | 247.5 | 297.5 | 347.5 | 397.5 | 447.5 | 497.5 | 547.5 | 597.5 | 647.5 | 697.5 |
| | Absolute | 250 | 300 | 350 | 400 | 450 | 500 | 550 | 600 | 650 | 700 |
| A | | 172 | 222 | 272 | 322 | 372 | 422 | 472 | 522 | 572 | 622 |
| M | | 142 | 192 | 242 | 292 | 342 | 392 | 442 | 492 | 542 | 592 |
| N | | 50 | 100 | 100 | 200 | 200 | 300 | 300 | 400 | 400 | 500 |
| P | | 35 | 85 | 85 | 185 | 185 | 285 | 285 | 385 | 385 | 485 |
| R | | 42 | 42 | 92 | 42 | 92 | 42 | 92 | 42 | 92 | 42 |
| U | | – | 1 | 1 | 2 | 2 | 3 | 3 | 4 | 4 | 5 |
| m | | 4 | 4 | 4 | 6 | 6 | 8 | 8 | 10 | 10 | 12 |
| Weight (kg) | | 1.2 | 1.3 | 1.4 | 1.5 | 1.6 | 1.7 | 1.8 | 1.9 | 2.0 | 2.1 |

# Controller

## Applicable Controllers

RCA series actuators can be operated using the following controllers. Choose the type that best suits your specific purpose.

| Name | External view | Model | Features | Maximum number of positioning points | Input power supply | Power-supply capacity | Reference page |
|---|---|---|---|---|---|---|---|
| Positioner type | | ACON-C-20I-NP-2-0 | Supporting up to 512 positioning points | 512 points | DC24V | Rating: 1.3A Peak: 3.7A | →P315 |
| Positioner type meeting safety category | | ACON-CG-20I-NP-2-0 | | | | | |
| Solenoid valve type | | ACON-CY-20I-NP-2-0 | Same control actions as those applicable to solenoid valves | 3 points | | | |
| Pulse-train input type (differential line driver specification) | | ACON-PL-20I-NP-2-0 | Pulse-train input type supporting a differential line driver | ( - ) | | | |
| Pulse-train input type (open collector specification) | | ACON-PO-20I-NP-2-0 | Pulse-train input type supporting an open collector | | | | |
| Serial communication type | | ACON-SE-20I-NP-0-0 | Dedicated serial communication type | 64 points | | | |
| Program control type | | ASEL-C-1-20①-NP-2-0 | Programmable type capable of operating up to 2 axes | 1500 points | | | →P345 |

* The ASEL model name is based on a 1-axis specification.
*① indicates the encoder type (I: Incremental / A: Absolute).

# RCA-SA6D

ROBO Cylinder, Slider Type, Actuator Width 52mm, 24-V Servo Motor
Built-In (Direct-Coupled) Motor Specification

■Model Specification Items

**RCA** – **SA6D** – ☐ – **30** – ☐ – ☐ – **A1** – ☐ – ☐

- Series: RCA
- Type: SA6D
- Encoder type: I: Incremental specification; A: Absolute specification
- Motor type: 30: Servo motor 30W
- Lead: 12: 12mm; 6: 6mm; 3: 3mm
- Stroke: 50:50mm ~ 600:600mm (Set in 50-mm steps)
- Applicable controller: A1 : ACON, ASEL
- Cable length: N : No cable; P : 1m; S : 3m; M : 5m; X□□ : Specified length; R□□ : Robot cable
- Options: BE : Brake (wire taken out from end); BL : Brake (wire taken out from left); BR : Brake (wire taken out from right); FT : Foot bracket; NM : Reversed-home specification; SR : Slider roller specification

* Refer to p. 31 of the front matter for details on the model specification items.

**POINT Selection Points**

(1) When the stroke increases, the maximum speed will drop to prevent the ball screw from reaching a critical speed. Use the actuator specification table below to check the maximum speed at the stroke you desire.
(2) The load capacity is based on operation at an acceleration of 0.3 G (or 0.2 G if the lead is 3). This is the maximum acceleration.

## Actuator Specifications

### ■Lead and Load Capacity

| Model | Motor output (W) | Lead (mm) | Maximum load capacity (Note 1) Horizontal (kg) | Maximum load capacity (Note 1) Vertical (kg) | Rated thrust (N) | Stroke (mm) |
|---|---|---|---|---|---|---|
| RCA-SA6D-①-30-12-②-A1-③-④ | 30 | 12 | 4 | 1.5 | 24.2 | 50 ~ 600 (Set in 50-mm steps) |
| RCA-SA6D-①-30-6-②-A1-③-④ | | 6 | 6 | 3 | 48.4 | |
| RCA-SA6D-①-30-3-②-A1-③-④ | | 3 | 12 | 6 | 96.8 | |

Explanation of numbers ① Encoder type ② Stroke ③ Cable length ④ Options

### ■Stroke and Maximum Speed

| Lead \ Stroke | 50 ~ 450 (Set in 50-mm steps) | 500 (mm) | 550 (mm) | 600 (mm) |
|---|---|---|---|---|
| 10 | 800 | 760 | 640 | 540 |
| 5 | 400 | 380 | 320 | 270 |
| 2.5 | 200 | 190 | 160 | 135 |

(Unit: mm/s)

## Actuator Specifications

| Item | Description |
|---|---|
| Drive method | Ball screw ø10mm, rolled C10 |
| Positioning repeatability | ±0.02mm |
| Backlash | 0.1mm or less |
| Base | Material: Aluminum with special alumite treatment |
| Allowable load moment | Ma : 8.9N • m Mb : 12.7N • m Mc : 18.6N • m |
| Overhang load length | Ma direction: 220mm or less, Mb/Mc directions: 220mm or less |
| Ambient operating temperature, humidity | 0~40°C, 85% RH or below (non-condensing) |

Direction of allowable load moment

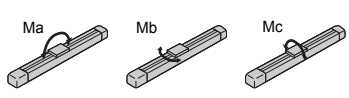


Overhang load length

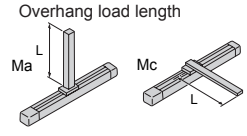

## Dimensions

You can download CAD drawings from our website. www.iai-robot.co.jp

2D CAD

* To change the home direction, the actuator must be returned to IAI for adjustment.
* With the reversed-home specification (NM), the home is positioned at approx. 3 mm toward the motor from the ME on the counter-motor side.

*1 Connect the motor/encoder cables. Refer to p. 324 for details on the cables.
*2 The slider moves to the ME during home return. Pay attention to prevent contact between the slider and surrounding parts.
ME: Mechanical end SE: Stroke end

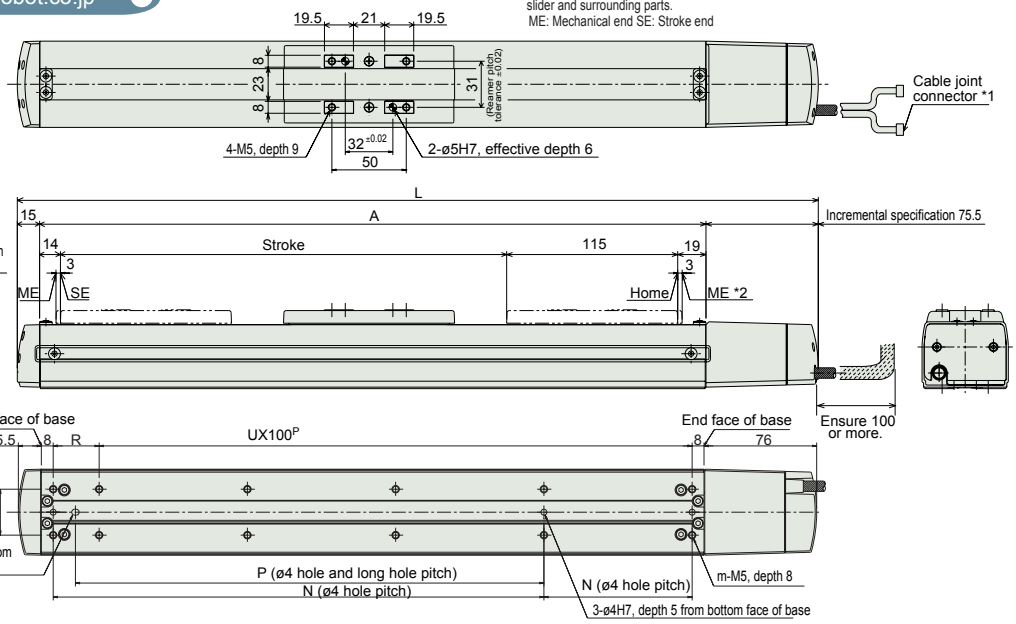


### Brake dimensions

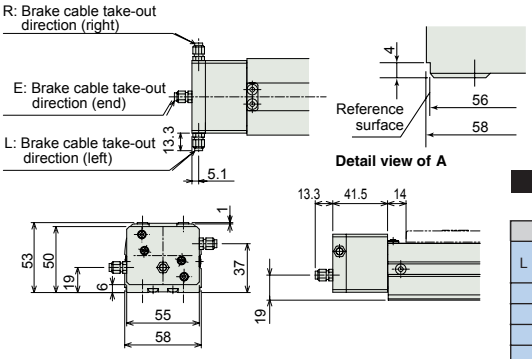


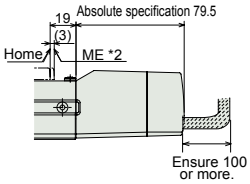


* Models with brake have their overall length (L) extended by 26.5 mm (or 39.8 mm if the wire is taken out from the end) and weight increased by 0.3 kg.

### Dimensions and Weight by Stroke

| Stroke | | 50 | 100 | 150 | 200 | 250 | 300 | 350 | 400 | 450 | 500 | 550 | 600 |
|---|---|---|---|---|---|---|---|---|---|---|---|---|---|
| L | Incremental | 288.5 | 348.5 | 388.5 | 438.5 | 488.5 | 538.5 | 588.5 | 638.5 | 688.5 | 738.5 | 788.5 | 838.5 |
| | Absolute | 292.5 | 342.5 | 392.5 | 442.5 | 492.5 | 542.5 | 592.5 | 642.5 | 692.5 | 742.5 | 792.5 | 842.5 |
| A | | 198 | 248 | 298 | 348 | 398 | 448 | 498 | 548 | 598 | 648 | 698 | 748 |
| N | | 81 | 131 | 181 | 231 | 281 | 331 | 381 | 431 | 481 | 531 | 581 | 631 |
| P | | 66 | 116 | 166 | 216 | 266 | 316 | 366 | 416 | 466 | 516 | 566 | 616 |
| R | | 81 | 31 | 81 | 31 | 81 | 31 | 81 | 31 | 81 | 31 | 81 | 31 |
| U | | 1 | 2 | 2 | 3 | 3 | 4 | 4 | 5 | 5 | 6 | 6 | 7 |
| m | | 6 | 8 | 8 | 10 | 10 | 12 | 12 | 14 | 14 | 16 | 16 | 18 |
| Weight (kg) | | 1.3 | 1.5 | 1.7 | 1.9 | 2.1 | 2.3 | 2.5 | 2.7 | 2.9 | 3.1 | 3.3 | 3.5 |

# Controller

## Applicable Controllers

RCA series actuators can be operated using the following controllers. Choose the type that best suits your specific purpose.

| Name | External view | Model | Features | Maximum number of positioning points | Input power supply | Power-supply capacity | Reference page |
|---|---|---|---|---|---|---|---|
| Positioner type | | ACON-C-30I-NP-2-0 | Supporting up to 512 positioning points | 512 points | DC24V | Rating: 1.3A Peak: 4.2A | →P315 |
| Positioner type meeting safety category | | ACON-CG-30I-NP-2-0 | | | | | |
| Solenoid valve type | | ACON-CY-30I-NP-2-0 | Same control actions as those applicable to solenoid valves | 3 points | | | |
| Pulse-train input type (differential line driver specification) | | ACON-PL-30I-NP-2-0 | Pulse-train input type supporting a differential line driver | ( - ) | | | |
| Pulse-train input type (open collector specification) | | ACON-PO-30I-NP-2-0 | Pulse-train input type supporting an open collector | | | | |
| Serial communication type | | ACON-SE-30I-NP-0-0 | Dedicated serial communication type | 64 points | | | |
| Program control type | | ASEL-C-1-30①-NP-2-0 | Programmable type capable of operating up to 2 axes | 1500 points | | | →P345 |

* The ASEL model name is based on a 1-axis specification.
*① indicates the encoder type (I: Incremental / A: Absolute).

# RCA-SS4D

ROBO Cylinder, Slider Type, Actuator Width 40mm, 24-V Servo Motor
Built-In (Direct-Coupled) Motor Specification, Iron Base Type

■Model Specification Items

**RCA** – **SS4D** – **I** – **20** – □ – □ – **A1** – □ – □

- Series: RCA
- Type: SS4D
- Encoder type: I: Incremental specification
- Motor type: 20: Servo motor 20W
- Lead: 10: 10mm; 5: 5mm; 2.5: 2.5mm
- Stroke: 50:50mm ~ 300:300mm (Set in 50-mm steps)
- Applicable controller: A1 : ACON, ASEL
- Cable length: N : No cable; P : 1m; S : 3m; M : 5m; X□□ : Specified length; R□□ : Robot cable
- Options: BE : Brake (wire taken out from end); BL : Brake (wire taken out from left); BR : Brake (wire taken out from right); NM : Reversed-home specification

* Refer to p. 31 of the front matter for details on the model specification items.

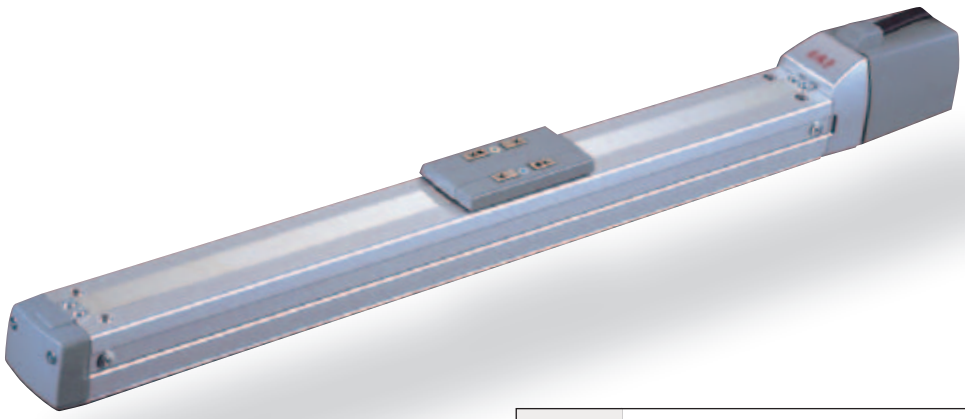

**POINT Selection Points**

(1) When the stroke increases, the maximum speed will drop to prevent the ball screw from reaching a critical speed. Use the actuator specification table below to check the maximum speed at the stroke you desire.
(2) The load capacity is based on operation at an acceleration of 0.3 G (or 0.2 G if the lead is 2.5). This is the maximum acceleration.

## Actuator Specifications

### ■Lead and Load Capacity

| Model | Motor output (W) | Lead (mm) | Maximum load capacity (Note 1) Horizontal (kg) | Vertical (kg) | Rated thrust (N) | Stroke (mm) |
|---|---|---|---|---|---|---|
| RCA-SS4D- I -20-10- ① - A1- ② - ③ | 20 | 10 | 4 | 1 | 19.6 | 50 ~ 300 (Set in 50-mm steps) |
| RCA-SS4D- I -20-5- ① - A1- ② - ③ | | 5 | 6 | 2.5 | 39.2 | |
| RCA-SS4D- I -20-2.5- ① - A1- ② - ③ | | 2.5 | 8 | 4.5 | 78.4 | |

Explanation of numbers ① Stroke ② Cable length ③ Options

### ■Stroke and Maximum Speed

| Lead \ Stroke | 50 ~ 300 (Set in 50-mm steps) |
|---|---|
| 10 | 665 |
| 5 | 330 |
| 2.5 | 165 |

(Unit: mm/s)

## Actuator Specifications

| Item | Description |
|---|---|
| Drive method | Ball screw ø8mm, rolled C10 |
| Positioning repeatability | ±0.02mm |
| Backlash | 0.1mm or less |
| Base | Material: Special alloy steel |
| Allowable load moment | Ma : 2.7N • m Mb : 3.9N • m Mc : 6.8N • m |
| Overhang load length | Ma direction: 120mm or less, Mb/Mc directions: 120mm or less |
| Ambient operating temperature, humidity | 0~40°C, 85% RH or below (non-condensing) |

Direction of allowable load moment

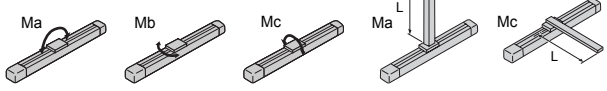


Overhang load length

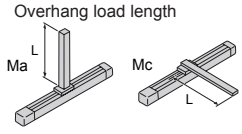

## Dimensions

You can download CAD drawings from our website. www.iai-robot.co.jp

2D CAD

* To change the home direction, the actuator must be returned to IAI for adjustment.
* With the reversed-home specification (NM), the home is positioned at approx. 2.2 mm toward the motor from the ME on the counter-motor side.

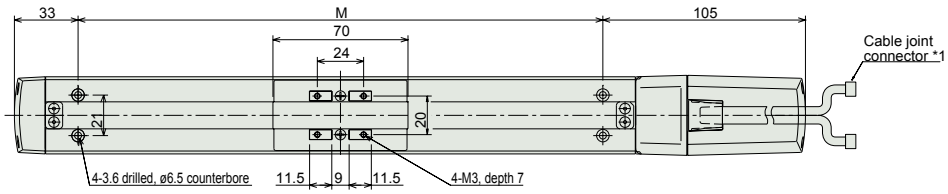


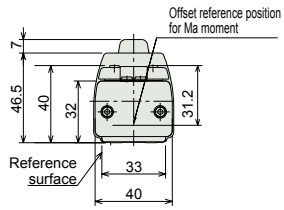


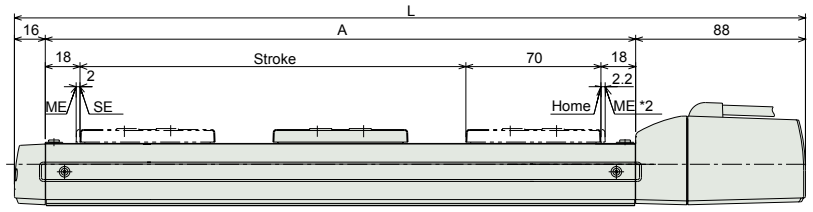


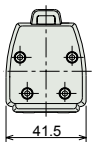


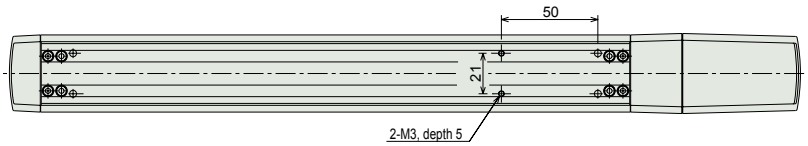


### Brake dimensions

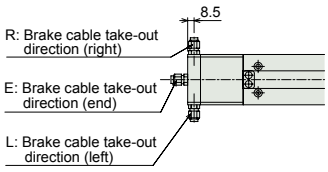


*1 Connect the motor/encoder cables. Refer to p. 324 for details on the cables.
*2 The slider moves to the ME during home return. Pay attention to prevent contact between the slider and surrounding parts.
ME: Mechanical end SE: Stroke end

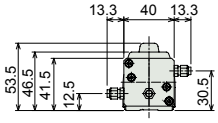


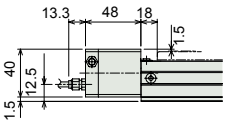


* Models with brake have their overall length (L) extended by 32 mm (or 45.3 mm if the wire is taken out from the end) and weight increased by 0.2 kg.

### Dimensions and Weight by Stroke

| Stroke | 50 | 100 | 150 | 200 | 250 | 300 |
|---|---|---|---|---|---|---|
| L | 260 | 310 | 360 | 410 | 460 | 510 |
| A | 156 | 206 | 256 | 306 | 356 | 406 |
| M | 122 | 172 | 222 | 272 | 322 | 372 |
| Weight (kg) | 1.1 | 1.2 | 1.3 | 1.4 | 1.5 | 1.6 |

# Controller

## Applicable Controllers

RCA series actuators can be operated using the following controllers. Choose the type that best suits your specific purpose.

| Name | External view | Model | Features | Maximum number of positioning points | Input power supply | Power-supply capacity | Reference page |
|---|---|---|---|---|---|---|---|
| Positioner type | | ACON-C-20I-NP-2-0 | Supporting up to 512 positioning points | 512 points | DC24V | Rating: 1.3A Peak: 3.7A | →P315 |
| Positioner type meeting safety category | | ACON-CG-20I-NP-2-0 | | | | | |
| Solenoid valve type | | ACON-CY-20I-NP-2-0 | Same control actions as those applicable to solenoid valves | 3 points | | | |
| Pulse-train input type (differential line driver specification) | | ACON-PL-20I-NP-2-0 | Pulse-train input type supporting a differential line driver | ( - ) | | | |
| Pulse-train input type (open collector specification) | | ACON-PO-20I-NP-2-0 | Pulse-train input type supporting an open collector | | | | |
| Serial communication type | | ACON-SE-20I-NP-0-0 | Dedicated serial communication type | 64 points | | | |
| Program control type | | ASEL-C-1-20 -NP-2-0 | Programmable type capable of operating up to 2 axes | 1500 points | | | →P345 |

* The ASEL model name is based on a 1-axis specification.

# RCA-SS5D

ROBO Cylinder, Slider Type, Actuator Width 52mm, 24-V Servo Motor
Built-In (Direct-Coupled) Motor Specification, Iron Base Type

■Model Specification Items

**RCA** – **SS5D** – **I** – **20** – □ – □ – **A1** – □ – □

- Series: RCA
- Type: SS5D
- Encoder type: I: Incremental specification
- Motor type: 20: Servo motor 20W
- Lead: 12: 12mm; 6: 6mm; 3: 3mm
- Stroke: 50:50mm ~ 500:500mm (Set in 50-mm steps)
- Applicable controller: A1 : ACON ASEL
- Cable length: N : No cable; P : 1m; S : 3m; M : 5m; X□□ : Specified length; R□□ : Robot cable
- Options: BE : Brake (wire taken out from end); BL : Brake (wire taken out from left); BR : Brake (wire taken out from right); NM : Reversed-home specification; SR : Slider roller specification

* Refer to p. 31 of the front matter for details on the model specification items.

**POINT Selection Points**

(1) When the stroke increases, the maximum speed will drop to prevent the ball screw from reaching a critical speed. Use the actuator specification table below to check the maximum speed at the stroke you desire.
(2) The load capacity is based on operation at an acceleration of 0.3 G (or 0.2 G if the lead is 3). This is the maximum acceleration.

## Actuator Specifications

### ■Lead and Load Capacity

| Model | Motor output (W) | Lead (mm) | Maximum load capacity (Note 1) Horizontal (kg) | Maximum load capacity (Note 1) Vertical (kg) | Rated thrust (N) | Stroke (mm) |
|---|---|---|---|---|---|---|
| RCA-SS5D- I -20-12- ① - A1- ② - ③ | 20 | 12 | 4 | 1 | 16.7 | 50 ~ 500 (Set in 50-mm steps) |
| RCA-SS5D- I -20-6- ① - A1- ② - ③ | | 6 | 8 | 2 | 33.3 | |
| RCA-SS5D- I -20-3- ① - A1- ② - ③ | | 3 | 12 | 4 | 65.7 | |

Explanation of numbers ① Stroke ② Cable length ③ Options

### ■Stroke and Maximum Speed

| Lead \ Stroke | 50 ~ 450 (Set in 50-mm steps) | 500 (mm) |
|---|---|---|
| 12 | 800 | 760 |
| 6 | 400 | 380 |
| 3 | 200 | 190 |

(Unit: mm/s)

## Actuator Specifications

| Item | Description |
|---|---|
| Drive method | Ball screw ø10mm, rolled C10 |
| Positioning repeatability | ±0.02mm |
| Backlash | 0.1mm or less |
| Base | Material: Special alloy steel |
| Allowable load moment | Ma : 4.9N • m Mb : 6.8N • m Mc : 11.7N• m |
| Overhang load length | Ma direction: 150mm or less, Mb/Mc directions: 150mm or less |
| Ambient operating temperature, humidity | 0~40°C, 85% RH or below (non-condensing) |

Direction of allowable load moment

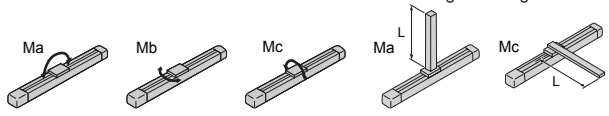


Overhang load length

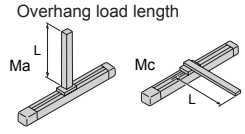

## Dimensions

You can download CAD drawings from our website. www.iai-robot.co.jp

2D CAD

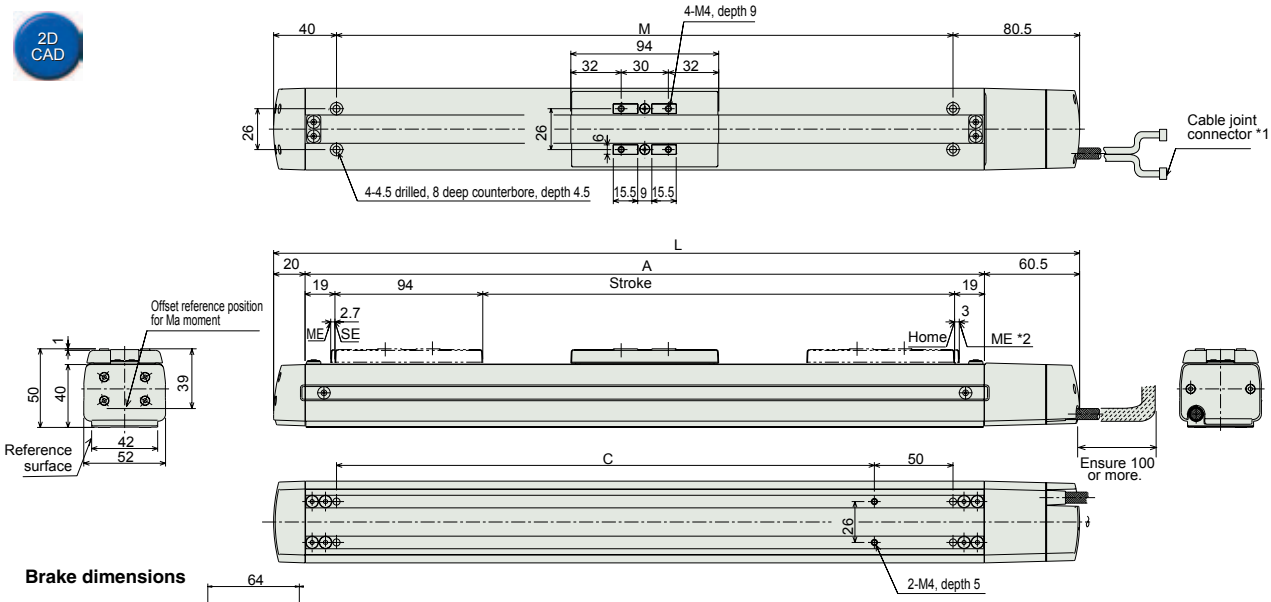


*1 Connect the motor/encoder cables. Refer to p. 324 for details on the cables.
*2 The slider moves to the ME during home return. Pay attention to prevent contact between the slider and surrounding parts.
ME: Mechanical end SE: Stroke end

### Brake dimensions

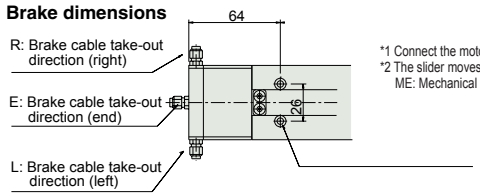


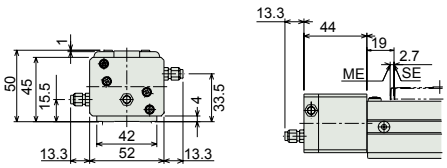


* Models with brake have their overall length (L) extended by 24 mm (or 37.3 mm if the wire is taken out from the end) and weight increased by 0.3 kg.

### Dimensions and Weight by Stroke

| Stroke | 50 | 100 | 150 | 200 | 250 | 300 | 350 | 400 | 450 | 500 |
|---|---|---|---|---|---|---|---|---|---|---|
| L | 262.5 | 312.5 | 362.5 | 412.5 | 462.5 | 512.5 | 562.5 | 612.5 | 662.5 | 712.5 |
| A | 182 | 232 | 282 | 332 | 382 | 432 | 482 | 532 | 582 | 632 |
| M | 142 | 192 | 242 | 292 | 342 | 392 | 442 | 492 | 542 | 592 |
| C | 92 | 142 | 192 | 242 | 292 | 342 | 392 | 442 | 492 | 542 |
| Weight (kg) | 1.4 | 1.5 | 1.6 | 1.7 | 1.8 | 1.9 | 2.0 | 2.1 | 2.2 | 2.3 |

# Controller

## Applicable Controllers

RCA series actuators can be operated using the following controllers. Choose the type that best suits your specific purpose.

| Name | External view | Model | Features | Maximum number of positioning points | Input power supply | Power-supply capacity | Reference page |
|---|---|---|---|---|---|---|---|
| Positioner type | | ACON-C-20I-NP-2-0 | Supporting up to 512 positioning points | 512 points | DC24V | Rating: 1.3A Peak: 3.7A | →P315 |
| Positioner type meeting safety category | | ACON-CG-20I-NP-2-0 | | | | | |
| Solenoid valve type | | ACON-CY-20I-NP-2-0 | Same control actions as those applicable to solenoid valves | 3 points | | | |
| Pulse-train input type (differential line driver specification) | | ACON-PL-20I-NP-2-0 | Pulse-train input type supporting a differential line driver | ( - ) | | | |
| Pulse-train input type (open collector specification) | | ACON-PO-20I-NP-2-0 | Pulse-train input type supporting an open collector | | | | |
| Serial communication type | | ACON-SE-20I-NP-0-0 | Dedicated serial communication type | 64 points | | | |
| Program control type | | ASEL-C-1-20 -NP-2-0 | Programmable type capable of operating up to 2 axes | 1500 points | | | →P345 |

* The ASEL model name is based on a 1-axis specification.

# RCA-SS6D

ROBO Cylinder, Slider Type, Actuator Width 58mm, 24-V Servo Motor
Built-In (Direct-Coupled) Motor Specification, Iron Base Type

■Model Specification Items

| RCA | SS6D | I | 20 | □ | □ | A1 | □ | □ |
|---|---|---|---|---|---|---|---|---|
| Series | Type | Encoder type | Motor type | Lead | Stroke | Applicable controller | Cable length | Options |
| | | I: Incremental specification | 20: Servo motor 20W | 12: 12mm<br>6: 6mm<br>3: 3mm | 50:50mm<br>~<br>300:300mm<br>(Set in 50-mm steps) | A1 : ACON<br>ASEL | N : No cable<br>P : 1m<br>S : 3m<br>M : 5m<br>X□□ : Specified length<br>R□□ : Robot cable | BE : Brake (wire taken out from end)<br>BL : Brake (wire taken out from left)<br>BR : Brake (wire taken out from right)<br>NM : Reversed-home specification<br>SR : Slider roller specification |

* Refer to p. 31 of the front matter for details on the model specification items.

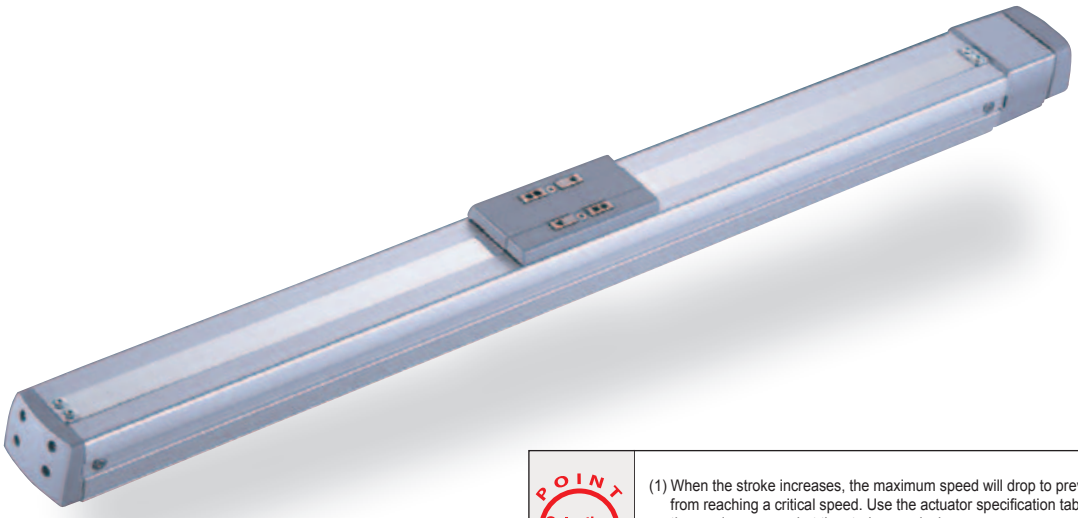

POINT Selection Points

(1) When the stroke increases, the maximum speed will drop to prevent the ball screw from reaching a critical speed. Use the actuator specification table below to check the maximum speed at the stroke you desire.
(2) The load capacity is based on operation at an acceleration of 0.3 G (or 0.2 G if the lead is 3). This is the maximum acceleration.

## Actuator Specifications

### ■Lead and Load Capacity

| Model | Motor output (W) | Lead (mm) | Maximum load capacity (Note 1) Horizontal (kg) | Vertical (kg) | Rated thrust (N) | Stroke (mm) |
|---|---|---|---|---|---|---|
| RCA-SS6D- I -30-12- ① - A1- ② - ③ | 30 | 12 | 6 | 1.5 | 24.2 | 50 ~ 600 (Set in 50-mm steps) |
| RCA-SS6D- I -30-6- ① - A1- ② - ③ | | 6 | 12 | 3 | 48.4 | |
| RCA-SS6D- I -30-3- ① - A1- ② - ③ | | 3 | 18 | 6 | 96.8 | |

Explanation of numbers ① Stroke ② Cable length ③ Options

### ■Stroke and Maximum Speed

| Lead \ Stroke | 50 ~ 450 (Set in 50-mm steps) | 500 (mm) | 550 (mm) | 600 (mm) |
|---|---|---|---|---|
| 12 | 800 | 760 | 640 | 540 |
| 6 | 400 | 380 | 320 | 270 |
| 3 | 200 | 190 | 160 | 135 |

(Unit: mm/s)

## Actuator Specifications

| Item | Description |
|---|---|
| Drive method | Ball screw ø10mm, rolled C10 |
| Positioning repeatability | ±0.02mm |
| Backlash | 0.1mm or less |
| Base | Material: Special alloy steel |
| Allowable load moment | Ma : 8.9N • m Mb : 12.7N • m Mc : 18.6N • m |
| Overhang load length | Ma direction: 220mm or less, Mb/Mc directions: 220mm or less |
| Ambient operating temperature, humidity | 0~40°C, 85% RH or below (non-condensing) |

Direction of allowable load moment

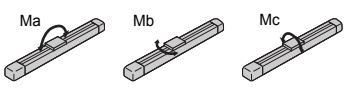


Overhang load length

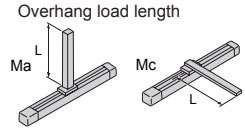

## Dimensions

You can download CAD drawings from our website. www.iai-robot.co.jp

2D CAD

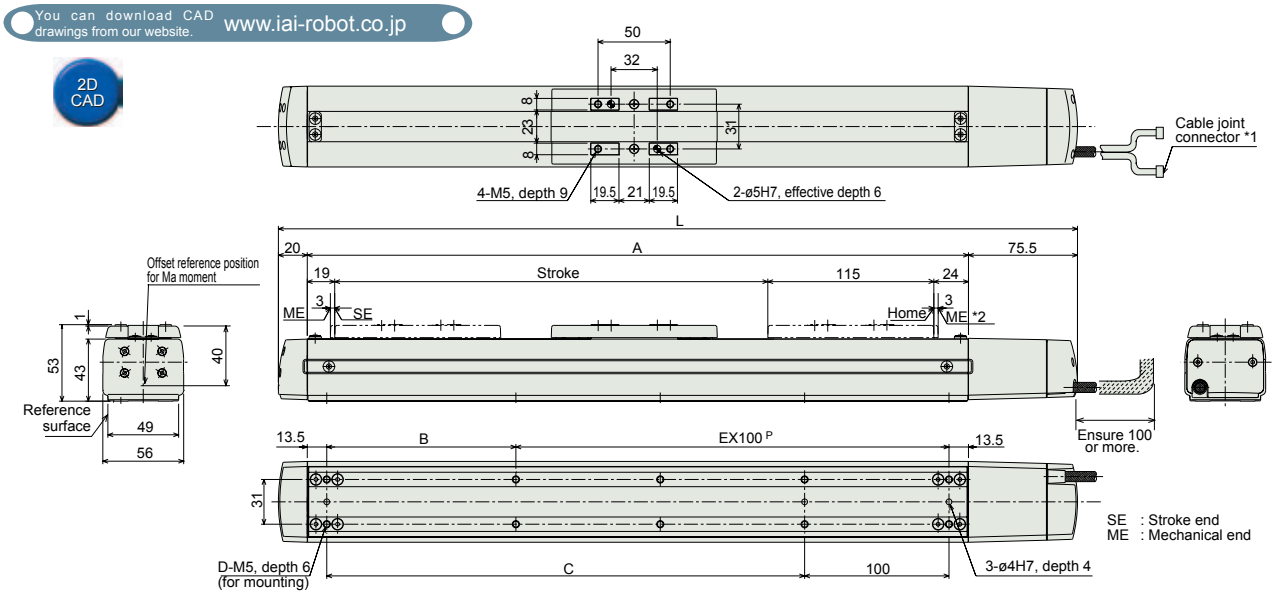


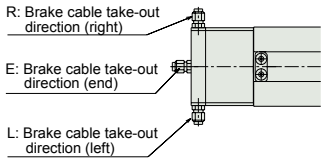


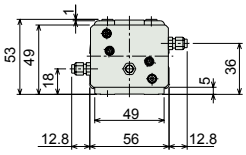


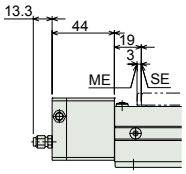


* Models with brake have their overall length (L) extended by 24 mm (or 37.3 mm if the wire is taken out from the end) and weight increased by 0.3 kg.

### Dimensions and Weight by Stroke

| Stroke | 50 | 100 | 150 | 200 | 250 | 300 | 350 | 400 | 450 | 500 | 550 | 600 |
|---|---|---|---|---|---|---|---|---|---|---|---|---|
| L | 303.5 | 353.5 | 403.5 | 453.5 | 503.5 | 553.5 | 603.5 | 653.5 | 703.5 | 753.5 | 803.5 | 853.5 |
| A | 208 | 258 | 308 | 358 | 408 | 458 | 508 | 558 | 608 | 658 | 708 | 758 |
| B | 81 | 131 | 81 | 131 | 81 | 131 | 81 | 131 | 81 | 131 | 81 | 131 |
| C | 81 | 131 | 181 | 231 | 281 | 331 | 381 | 431 | 481 | 531 | 581 | 631 |
| D | 6 | 6 | 8 | 8 | 10 | 10 | 12 | 12 | 14 | 14 | 16 | 16 |
| E | 1 | 1 | 2 | 2 | 3 | 3 | 4 | 4 | 5 | 5 | 6 | 6 |
| Weight (kg) | 2.4 | 2.6 | 2.8 | 3.0 | 3.2 | 3.4 | 3.6 | 3.8 | 4.0 | 4.2 | 4.4 | 4.7 |

# Controller

## Applicable Controllers

RCA series actuators can be operated using the following controllers. Choose the type that best suits your specific purpose.

| Name | External view | Model | Features | Maximum number of positioning points | Input power supply | Power-supply capacity | Reference page |
|---|---|---|---|---|---|---|---|
| Positioner type | | ACON-C-30I-NP-2-0 | Supporting up to 512 positioning points | 512 points | DC24V | Rating: 1.3A Peak: 4.2A | →P315 |
| Positioner type meeting safety category | | ACON-CG-30I-NP-2-0 | | | | | |
| Solenoid valve type | | ACON-CY-30I-NP-2-0 | Same control actions as those applicable to solenoid valves | 3 points | | | |
| Pulse-train input type (differential line driver specification) | | ACON-PL-30I-NP-2-0 | Pulse-train input type supporting a differential line driver | ( - ) | | | |
| Pulse-train input type (open collector specification) | | ACON-PO-30I-NP-2-0 | Pulse-train input type supporting an open collector | | | | |
| Serial communication type | | ACON-SE-30I-NP-0-0 | Dedicated serial communication type | 64 points | | | |
| Program control type | | ASEL-C-1-30 -NP-2-0 | Programmable type capable of operating up to 2 axes | 1500 points | | | →P345 |

* The ASEL model name is based on a 1-axis specification.

# RCA-SA4R

ROBO Cylinder, Slider Type, Actuator Width 40mm, 24-V Servo Motor, Motor Reversing

■Model Specification Items

**RCA** – **SA4R** – [ ] – **20** – [ ] – [ ] – **A1** – [ ] – [ ]

- Series: RCA
- Type: SA4R
- Encoder type: I: Incremental specification; A: Absolute specification
- Motor type: 20: Servo motor 20W
- Lead: 10: 10mm; 5: 5mm; 2.5: 2.5mm
- Stroke: 50:50mm ~ 400:400mm (Set in 50-mm steps)
- Applicable controller: A1 : ACON, ASEL
- Cable length: N : No cable; P : 1m; S : 3m; M : 5m; X□□ : Specified length; R□□ : Robot cable
- Options: B : Brake; HS : Home check sensor; NM : Reversed-home specification; R : Opposite motor reversing direction; SR : Slider roller specification; SS : Slider spacer

* Refer to p. 31 of the front matter for details on the model specification items.

**POINT Selection Points**

(1) When the stroke increases, the maximum speed will drop to prevent the ball screw from reaching a critical speed. Use the actuator specification table below to check the maximum speed at the stroke you desire.
(2) The load capacity is based on operation at an acceleration of 0.3 G (or 0.2 G if the lead is 2.5). This is the maximum acceleration.

## Actuator Specifications

### ■Lead and Load Capacity

| Model | Motor output (W) | Lead (mm) | Maximum load capacity (Note 1) Horizontal (kg) | Vertical (kg) | Rated thrust (N) | Stroke (mm) |
|---|---|---|---|---|---|---|
| RCA-SA4R-①-20-10-②-A1-③-④ | 20 | 10 | 4 | 1 | 19.6 | 50 ~ 400 (Set in 50-mm steps) |
| RCA-SA4R-①-20-5-②-A1-③-④ | | 5 | 6 | 2.5 | 39.2 | |
| RCA-SA4R-①-20-2.5-②-A1-③-④ | | 2.5 | 8 | 4.5 | 78.4 | |

Explanation of numbers ① Encoder type ② Stroke ③ Cable length ④ Options

### ■Stroke and Maximum Speed

| Lead \ Stroke | 50 ~ 400 (Set in 50-mm steps) |
|---|---|
| 10 | 665 |
| 5 | 330 |
| 2.5 | 165 |

(Unit: mm/s)

## Actuator Specifications

| Item | Description |
|---|---|
| Drive method | Ball screw ø8mm, rolled C10 |
| Positioning repeatability | ±0.02mm |
| Backlash | 0.1mm or less |
| Base | Material: Aluminum with special alumite treatment |
| Allowable load moment | Ma : 2.7N • m Mb : 3.9N • m Mc : 6.8N • m |
| Overhang load length | Ma direction: 120mm or less, Mb/Mc directions: 120mm or less |
| Ambient operating temperature, humidity | 0~40°C, 85% RH or below (non-condensing) |

Direction of allowable load moment

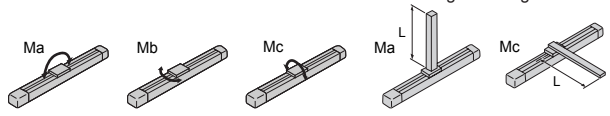


Overhang load length

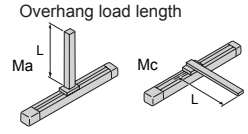

## Dimensions

You can download CAD drawings from our website. www.iai-robot.co.jp

2D CAD

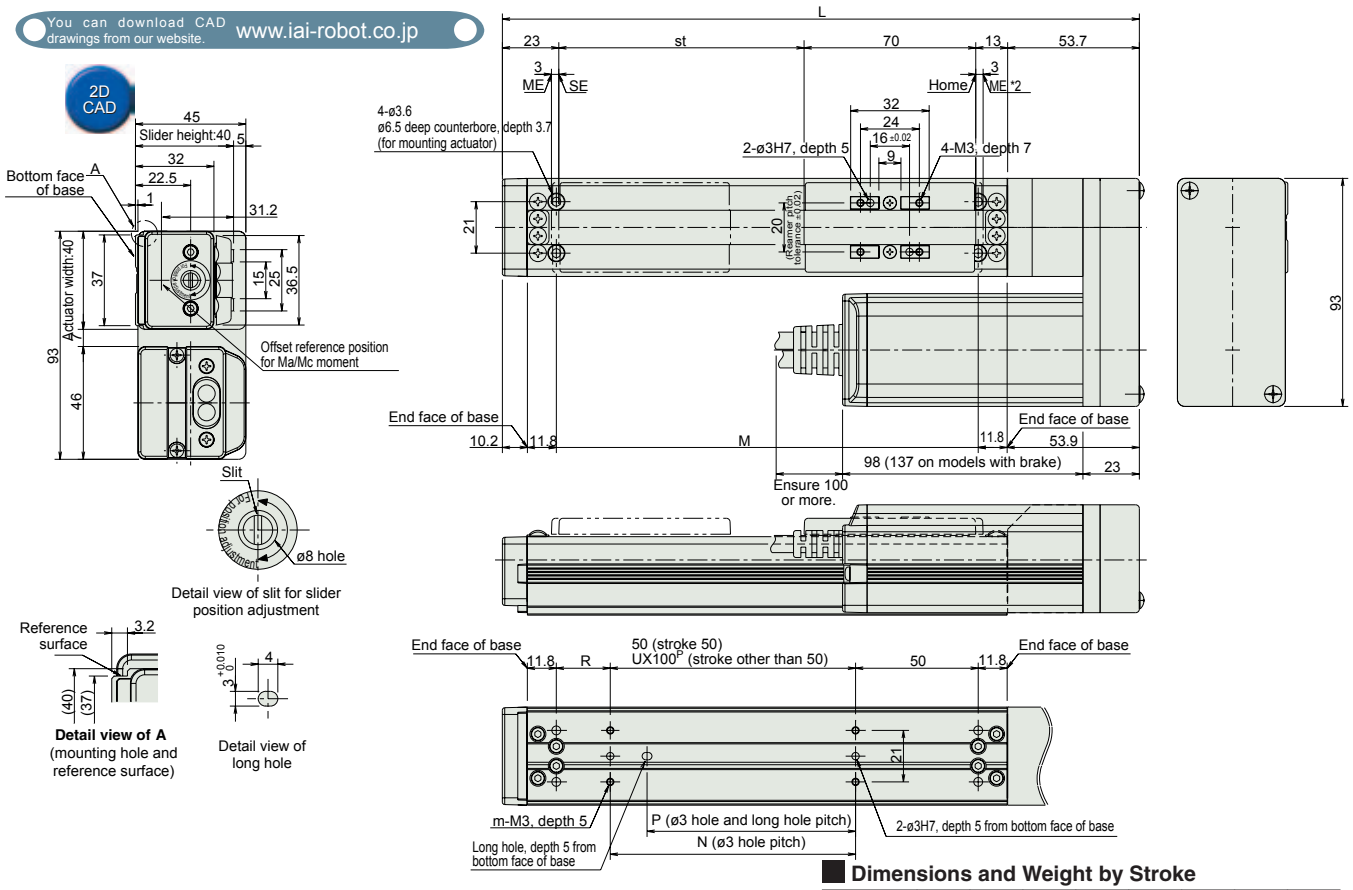


### Dimensions and Weight by Stroke

| Stroke | 50 | 100 | 150 | 200 | 250 | 300 | 350 | 400 |
|---|---|---|---|---|---|---|---|---|
| L | 209.7 | 259.7 | 309.7 | 359.7 | 409.7 | 459.7 | 509.7 | 559.7 |
| M | 122 | 172 | 222 | 272 | 322 | 372 | 422 | 472 |
| N | 50 | 100 | 100 | 200 | 200 | 300 | 300 | 400 |
| P | 35 | 85 | 85 | 185 | 185 | 285 | 285 | 385 |
| R | 22 | 22 | 72 | 22 | 72 | 22 | 72 | 22 |
| U | – | 1 | 1 | 2 | 2 | 3 | 3 | 4 |
| m | 4 | 4 | 4 | 6 | 6 | 8 | 8 | 10 |
| Weight (kg) | 0.8 | 0.9 | 1.0 | 1.1 | 1.2 | 1.3 | 1.4 | 1.5 |

# Controller

## Applicable Controllers

RCA series actuators can be operated using the following controllers. Choose the type that best suits your specific purpose.

| Name | External view | Model | Features | Maximum number of positioning points | Input power supply | Power-supply capacity | Reference page |
|---|---|---|---|---|---|---|---|
| Positioner type | | ACON-C-20I-NP-2-0 | Supporting up to 512 positioning points | 512 points | DC24V | Rating: 1.3A Peak: 3.7A | →P315 |
| Positioner type meeting safety category | | ACON-CG-20I-NP-2-0 | | | | | |
| Solenoid valve type | | ACON-CY-20I-NP-2-0 | Same control actions as those applicable to solenoid valves | 3 points | | | |
| Pulse-train input type (differential line driver specification) | | ACON-PL-20I-NP-2-0 | Pulse-train input type supporting a differential line driver | ( - ) | | | |
| Pulse-train input type (open collector specification) | | ACON-PO-20I-NP-2-0 | Pulse-train input type supporting an open collector | | | | |
| Serial communication type | | ACON-SE-20I-NP-0-0 | Dedicated serial communication type | 64 points | | | |
| Program control type | | ASEL-C-1-20①-NP-2-0 | Programmable type capable of operating up to 2 axes | 1500 points | | | →P345 |

* The ASEL model name is based on a 1-axis specification.
*① indicates the encoder type (I: Incremental / A: Absolute).

# RCA-SA5R

ROBO Cylinder, Slider Type, Actuator Width 52mm, 24-V Servo Motor, Motor Reversing

■Model Specification Items

**RCA** – **SA5R** – [ ] – **20** – [ ] – [ ] – **A1** – [ ] – [ ]

Series — Type — Encoder type — Motor type — Lead — Stroke — Applicable controller — Cable length — Options

Encoder type:
- I: Incremental specification
- A: Absolute specification

Motor type:
- 20: Servo motor 20W

Lead:
- 12: 12mm
- 6: 6mm
- 3: 3mm

Stroke:
- 50:50mm ~ 500:500mm (Set in 50-mm steps)

Applicable controller:
- A1 : ACON ASEL

Cable length:
- N : No cable
- P : 1m
- S : 3m
- M : 5m
- X□□ : Specified length
- R□□ : Robot cable

Options:
- B : Brake
- HS : Home check sensor
- NM : Reversed-home specification
- R : Opposite motor reversing direction
- SR : Slider roller specification

* Refer to p. 31 of the front matter for details on the model specification items.

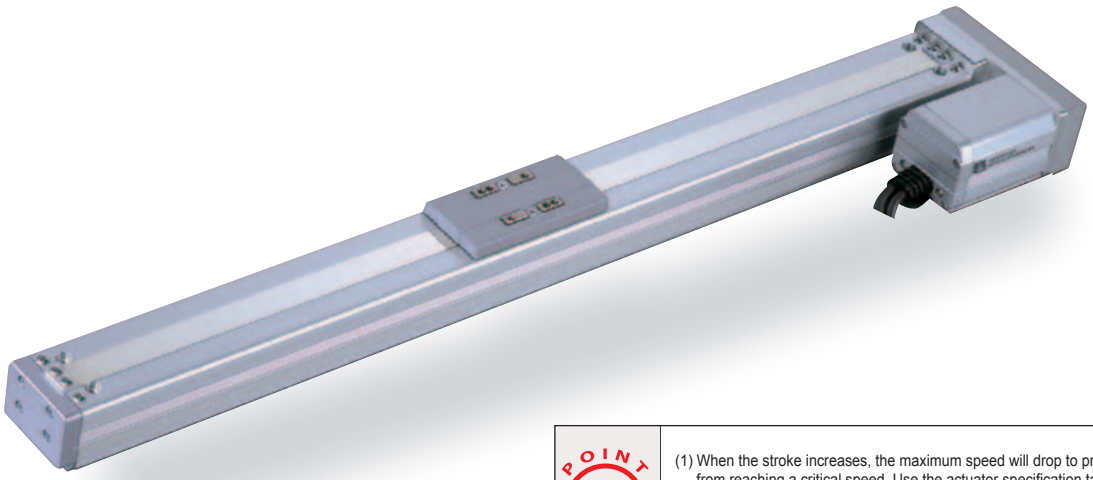

**POINT Selection Points**

(1) When the stroke increases, the maximum speed will drop to prevent the ball screw from reaching a critical speed. Use the actuator specification table below to check the maximum speed at the stroke you desire.
(2) The load capacity is based on operation at an acceleration of 0.3 G (or 0.2 G if the lead is 3). This is the maximum acceleration.

## Actuator Specifications

### ■Lead and Load Capacity

| Model | Motor output (W) | Lead (mm) | Maximum load capacity (Note 1) Horizontal (kg) | Maximum load capacity (Note 1) Vertical (kg) | Rated thrust (N) | Stroke (mm) |
|---|---|---|---|---|---|---|
| RCA-SA5R-①-20-12-②-A1-③-④ | 20 | 12 | 4 | 1 | 16.7 | 50 ~ 500 (Set in 50-mm steps) |
| RCA-SA5R-①-20-6-②-A1-③-④ | | 6 | 8 | 2 | 33.3 | |
| RCA-SA5R-①-20-3-②-A1-③-④ | | 3 | 12 | 4 | 65.7 | |

Explanation of numbers ① Encoder type ② Stroke ③ Cable length ④ Options

### ■Stroke and Maximum Speed

| Lead \ Stroke | 50 ~ 450 (Set in 50-mm steps) | 500 (mm) |
|---|---|---|
| 12 | 800 | 760 |
| 6 | 400 | 380 |
| 3 | 200 | 190 |

(Unit: mm/s)

## Actuator Specifications

| Item | Description |
|---|---|
| Drive method | Ball screw ø10mm, rolled C10 |
| Positioning repeatability | ±0.02mm |
| Backlash | 0.1mm or less |
| Base | Material: Aluminum with special alumite treatment |
| Allowable load moment | Ma : 4.9N • m Mb : 6.8N • m Mc : 11.7N • m |
| Overhang load length | Ma direction: 150mm or less, Mb/Mc directions: 150mm or less |
| Ambient operating temperature, humidity | 0~40°C, 85% RH or below (non-condensing) |

Direction of allowable load moment

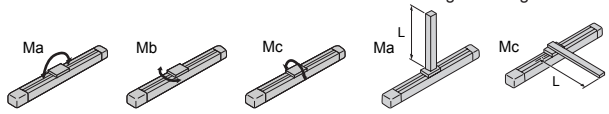


Overhang load length

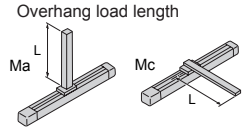

## Dimensions

You can download CAD drawings from our website. www.iai-robot.co.jp

2D CAD

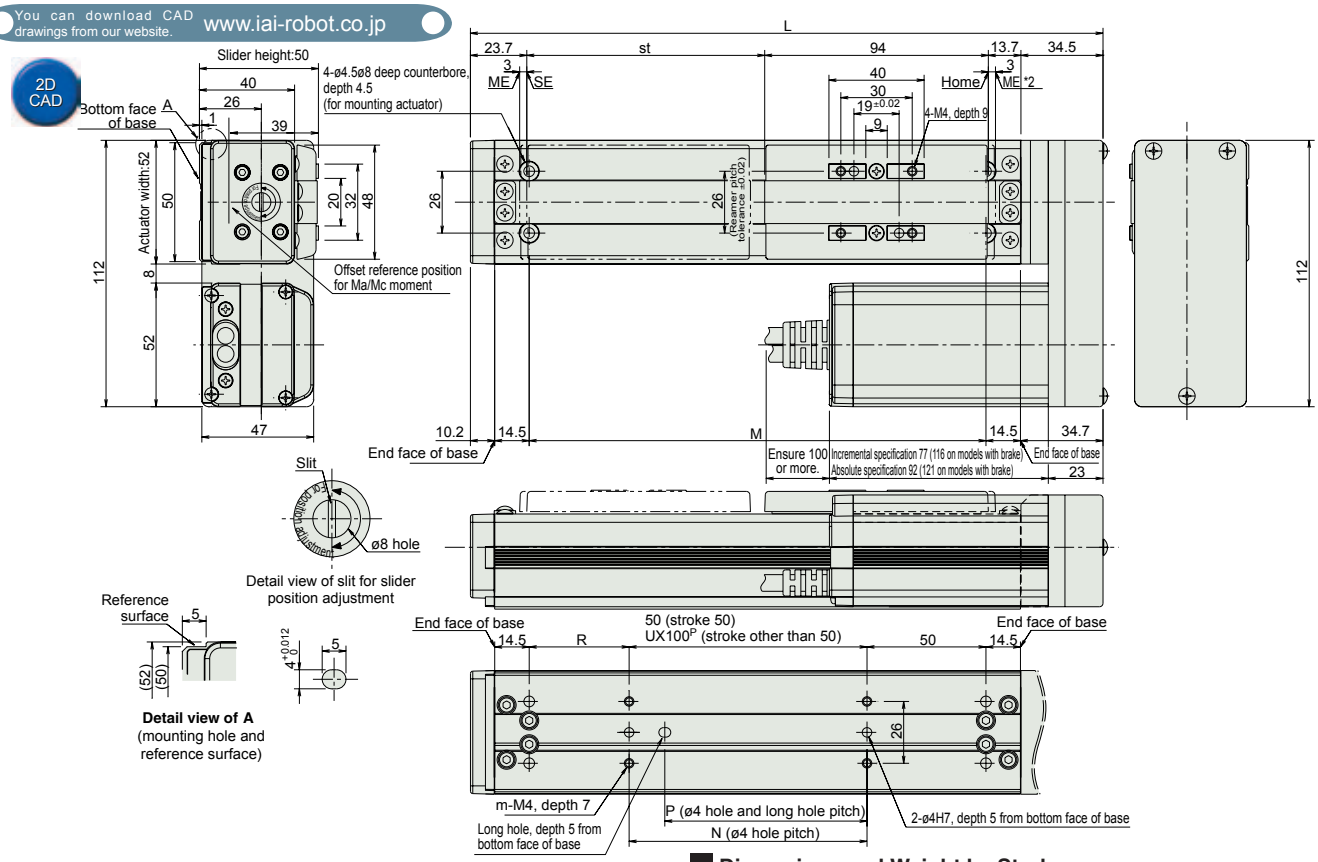


### Dimensions and Weight by Stroke

| Stroke | 50 | 100 | 150 | 200 | 250 | 300 | 350 | 400 | 450 | 500 |
|---|---|---|---|---|---|---|---|---|---|---|
| L | 215.9 | 265.9 | 315.9 | 365.9 | 415.9 | 465.9 | 515.9 | 565.9 | 615.9 | 665.9 |
| M | 142 | 192 | 242 | 292 | 342 | 392 | 442 | 492 | 542 | 592 |
| N | 50 | 100 | 100 | 200 | 200 | 300 | 300 | 400 | 400 | 500 |
| P | 35 | 85 | 85 | 185 | 185 | 285 | 285 | 385 | 385 | 485 |
| R | 42 | 42 | 92 | 42 | 92 | 42 | 92 | 42 | 92 | 42 |
| U | – | 1 | 1 | 2 | 2 | 3 | 3 | 4 | 4 | 5 |
| m | 4 | 4 | 4 | 6 | 6 | 8 | 8 | 10 | 10 | 12 |
| Weight (kg) | 1.5 | 1.6 | 1.7 | 1.8 | 1.9 | 2.0 | 2.1 | 2.2 | 2.3 | 2.4 |

# Controller

## Applicable Controllers

RCA series actuators can be operated using the following controllers. Choose the type that best suits your specific purpose.

| Name | External view | Model | Features | Maximum number of positioning points | Input power supply | Power-supply capacity | Reference page |
|---|---|---|---|---|---|---|---|
| Positioner type | | ACON-C-20I-NP-2-0 | Supporting up to 512 positioning points | 512 points | DC24V | Rating: 1.3A Peak: 3.7A | →P315 |
| Positioner type meeting safety category | | ACON-CG-20I-NP-2-0 | | | | | |
| Solenoid valve type | | ACON-CY-20I-NP-2-0 | Same control actions as those applicable to solenoid valves | 3 points | | | |
| Pulse-train input type (differential line driver specification) | | ACON-PL-20I-NP-2-0 | Pulse-train input type supporting a differential line driver | ( - ) | | | |
| Pulse-train input type (open collector specification) | | ACON-PO-20I-NP-2-0 | Pulse-train input type supporting an open collector | | | | |
| Serial communication type | | ACON-SE-20I-NP-0-0 | Dedicated serial communication type | 64 points | | | |
| Program control type | | ASEL-C-1-20①-NP-2-0 | Programmable type capable of operating up to 2 axes | 1500 points | | | →P345 |

* The ASEL model name is based on a 1-axis specification.
*① indicates the encoder type (I: Incremental / A: Absolute).

# RCA-SA6R

ROBO Cylinder, Slider Type, Actuator Width 58mm, 24-V Servo Motor, Motor Reversing

■Model Specification Items

**RCA** – **SA6R** – ☐ – **30** – ☐ – ☐ – **A1** – ☐ – ☐

- Series: RCA
- Type: SA6R
- Encoder type: I: Incremental specification; A: Absolute specification
- Motor type: 30: Servo motor 30W
- Lead: 12: 12mm; 6: 6mm; 3: 3mm
- Stroke: 50:50mm ~ 600:600mm (Set in 50-mm steps)
- Applicable controller: A1 : ACON, ASEL
- Cable length: N : No cable; P : 1m; S : 3m; M : 5m; X□□ : Specified length; R□□ : Robot cable
- Options: B : Brake; HS : Home check sensor; NM : Reversed-home specification; R : Opposite motor reversing direction; SR : Slider roller specification

* Refer to p. 31 of the front matter for details on the model specification items.

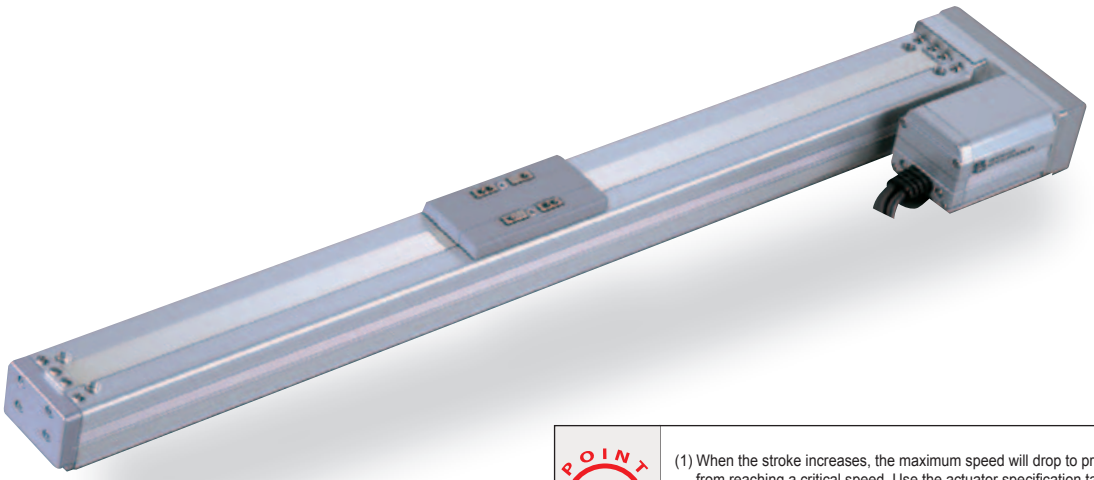

**POINT Selection Points**

(1) When the stroke increases, the maximum speed will drop to prevent the ball screw from reaching a critical speed. Use the actuator specification table below to check the maximum speed at the stroke you desire.
(2) The load capacity is based on operation at an acceleration of 0.3 G (or 0.2 G if the lead is 3). This is the maximum acceleration.

## Actuator Specifications

### ■Lead and Load Capacity

| Model | Motor output (W) | Lead (mm) | Maximum load capacity (Note 1) Horizontal (kg) | Maximum load capacity (Note 1) Vertical (kg) | Rated thrust (N) | Stroke (mm) |
|---|---|---|---|---|---|---|
| RCA-SA6R-①-30-12-②-A1-③-④ | 30 | 12 | 6 | 1.5 | 24.2 | 50 ~ 600 (Set in 50-mm steps) |
| RCA-SA6R-①-30-6-②-A1-③-④ | | 6 | 12 | 3 | 48.4 | |
| RCA-SA6R-①-30-3-②-A1-③-④ | | 3 | 18 | 6 | 96.8 | |

Explanation of numbers ① Encoder type ② Stroke ③ Cable length ④ Options

### ■Stroke and Maximum Speed

| Lead \ Stroke | 50 ~ 450 (Set in 50-mm steps) | 500 (mm) | 550 (mm) | 600 (mm) |
|---|---|---|---|---|
| 12 | 800 | 760 | 640 | 540 |
| 6 | 400 | 380 | 320 | 270 |
| 3 | 200 | 190 | 160 | 135 |

(Unit: mm/s)

## Actuator Specifications

| Item | Description |
|---|---|
| Drive method | Ball screw ø10mm, rolled C10 |
| Positioning repeatability | ±0.02mm |
| Backlash | 0.1mm or less |
| Base | Material: Aluminum with special alumite treatment |
| Allowable load moment | Ma : 8.9N • m Mb : 12.7N • m Mc : 18.6N • m |
| Overhang load length | Ma direction: 220mm or less, Mb/Mc directions: 220mm or less |
| Ambient operating temperature, humidity | 0~40°C, 85% RH or below (non-condensing) |

Direction of allowable load moment

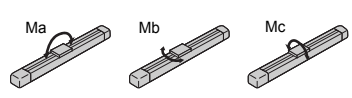


Overhang load length

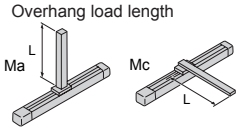

## Dimensions

You can download CAD drawings from our website. www.iai-robot.co.jp

2D CAD

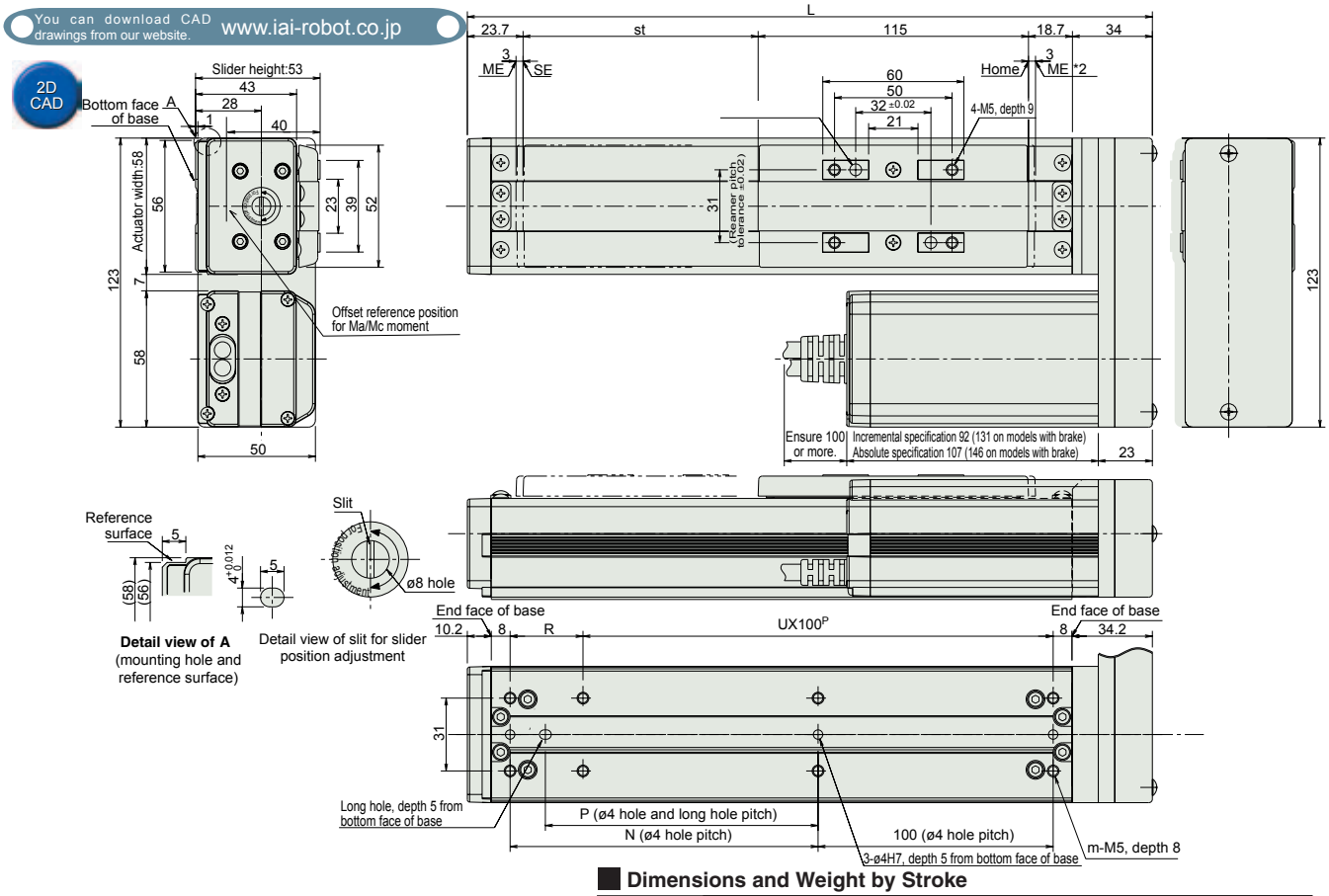


### Dimensions and Weight by Stroke

| Stroke | 50 | 100 | 150 | 200 | 250 | 300 | 350 | 400 | 450 | 500 | 550 | 600 |
|---|---|---|---|---|---|---|---|---|---|---|---|---|
| L | 215.9 | 265.9 | 315.9 | 365.9 | 415.9 | 465.9 | 515.9 | 565.9 | 615.9 | 665.9 | 741.4 | 791.4 |
| N | 81 | 131 | 181 | 231 | 281 | 331 | 381 | 431 | 481 | 531 | 581 | 631 |
| P | 66 | 116 | 166 | 216 | 266 | 316 | 366 | 416 | 466 | 516 | 566 | 616 |
| R | 81 | 31 | 81 | 31 | 81 | 31 | 81 | 31 | 81 | 31 | 81 | 31 |
| U | 1 | 2 | 2 | 3 | 3 | 4 | 4 | 5 | 5 | 6 | 6 | 7 |
| m | 6 | 8 | 8 | 10 | 10 | 12 | 12 | 14 | 14 | 16 | 16 | 18 |
| Weight (kg) | 1.5 | 1.6 | 1.7 | 1.8 | 1.9 | 2.0 | 2.1 | 2.2 | 2.3 | 2.4 | 2.3 | 2.4 |

# Controller

## Applicable Controllers

RCA series actuators can be operated using the following controllers. Choose the type that best suits your specific purpose.

| Name | External view | Model | Features | Maximum number of positioning points | Input power supply | Power-supply capacity | Reference page |
|---|---|---|---|---|---|---|---|
| Positioner type | | ACON-C-30I-NP-2-0 | Supporting up to 512 positioning points | 512 points | DC24V | Rating: 1.3A Peak: 3.7A | →P315 |
| Positioner type meeting safety category | | ACON-CG-30I-NP-2-0 | | | | | |
| Solenoid valve type | | ACON-CY-30I-NP-2-0 | Same control actions as those applicable to solenoid valves | 3 points | | | |
| Pulse-train input type (differential line driver specification) | | ACON-PL-30I-NP-2-0 | Pulse-train input type supporting a differential line driver | ( - ) | | | |
| Pulse-train input type (open collector specification) | | ACON-PO-30I-NP-2-0 | Pulse-train input type supporting an open collector | | | | |
| Serial communication type | | ACON-SE-30I-NP-0-0 | Dedicated serial communication type | 64 points | | | |
| Program control type | | ASEL-C-1-30①-NP-2-0 | Programmable type capable of operating up to 2 axes | 1500 points | | | →P345 |

* The ASEL model name is based on a 1-axis specification.
*① indicates the encoder type (I: Incremental / A: Absolute).

ROBO CYLINDER

# Rod Type

# RCA

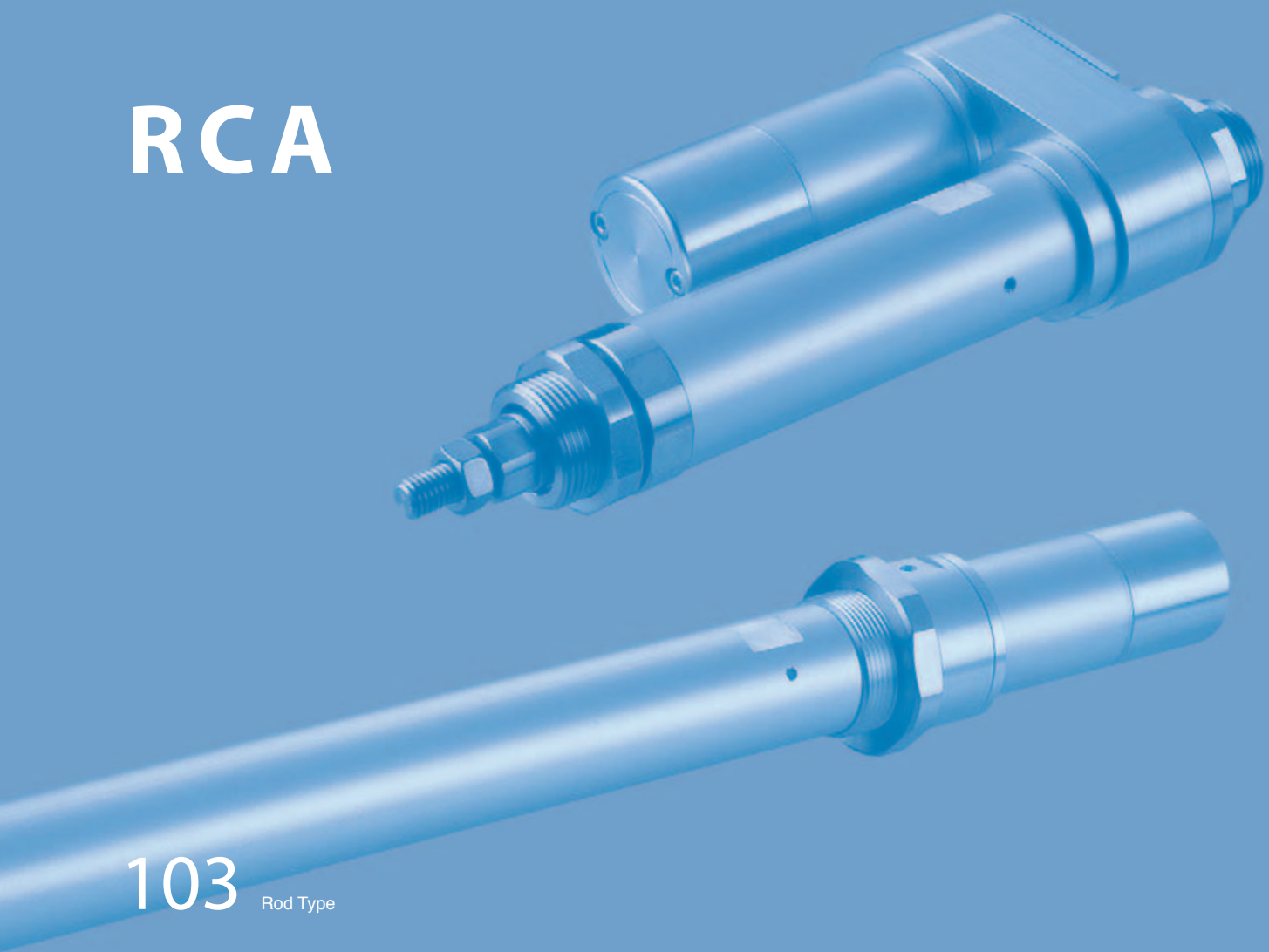

# RCA-RA3C

ROBO Cylinder, Rod Type, Actuator Diameter ø32mm, 24-V Servo Motor Coupling Specification

■Model Specification Items

**RCA** – **RA3C** – **I** – **20** – [ ] – [ ] – **A1** – [ ] – [ ]

- Series: RCA
- Type: RA3C
- Encoder type: I: Incremental specification
- Motor type: 20: Servo motor 20W
- Lead: 10: 10mm; 5: 5mm; 2.5: 2.5mm
- Stroke: 50:50mm ~ 200:200mm (Set in 50-mm steps)
- Applicable controller: A1 : ACON, ASEL
- Cable length: N : No cable; P : 1m; S : 3m; M : 5m; X□□ : Specified length; R□□ : Robot cable
- Options: Refer to the options price list below.

* Refer to p. 31 of the front matter for details on the model specification items.

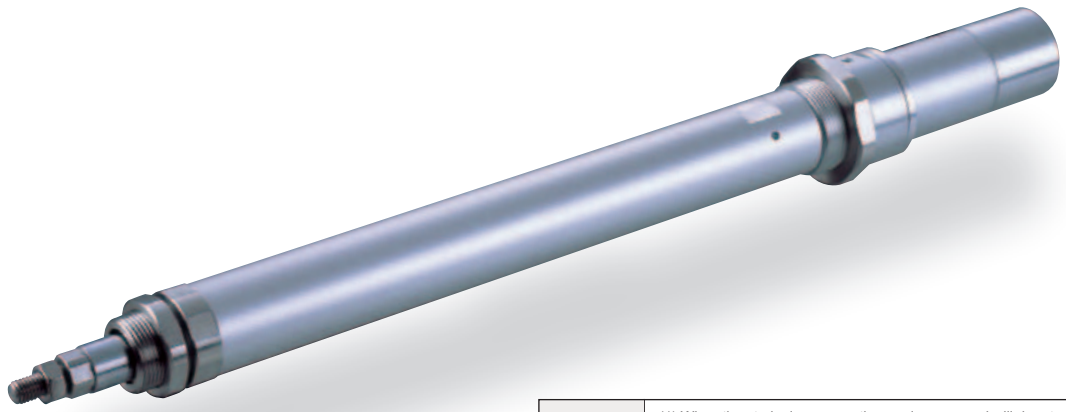

**POINT Selection Points**

(1) When the stroke increases, the maximum speed will drop to prevent the ball screw from reaching a critical speed. Use the actuator specification table below to check the maximum speed at the stroke you desire.
(2) The load capacity is based on operation at an acceleration of 0.3 G (or 0.2 G if the lead is 2.5). The maximum acceleration is 0.3 G (or 0.2 G if the lead is 2.5).
(3) The horizontal load capacity assumes use of an external guide and absence of external force applied from any direction other than the moving direction of the rod.

## Actuator Specifications

### ■Lead and Load Capacity

| Model | Motor output (W) | Lead (mm) | Maximum load capacity Horizontal (kg) | Maximum load capacity Vertical (kg) | Rated thrust (N) | Stroke (mm) |
|---|---|---|---|---|---|---|
| RCA-RA3C- I -20-10- ① - A1- ② - ③ | 20 | 10 | 4.0 | 1.5 | 36.2 | 50 ~ 200 (Set in 50-mm steps) |
| RCA-RA3C- I -20-5- ① - A1- ② - ③ | | 5 | 9.0 | 3.0 | 72.4 | |
| RCA-RA3C- I -20-2.5- ① - A1- ② - ③ | | 2.5 | 18.0 | 6.5 | 144.8 | |

Explanation of numbers ① Stroke ② Cable length ③ Options

### ■Stroke and Maximum Speed

| Lead \ Stroke | 50 ~ 200 (Set in 50-mm steps) |
|---|---|
| 10 | 500 |
| 5 | 250 |
| 2.5 | 125 |

(Unit: mm/s)

## Actuator Specifications

| Item | Description |
|---|---|
| Drive method | Ball screw ø8mm, rolled C10 |
| Positioning repeatability | ±0.02mm |
| Backlash | 0.05mm or less |
| Base | Material: Aluminum with white alumite treatment |
| Rod diameter | ø16mm |
| Rod non-rotation accuracy | ±1.0° |
| Ambient operating temperature, humidity | 0~40°C, 85% RH or below (non-condensing) |

## Dimensions

You can download CAD drawings from our website. www.iai-robot.co.jp

2D CAD

*1 Connect the motor/encoder cables. Refer to p. 324 for details on the cables.
*2 The rod moves to the ME during home return. Pay attention to prevent contact between the rod and surrounding parts.
ME: Mechanical end
SE: Stroke end

**[Without brake]**

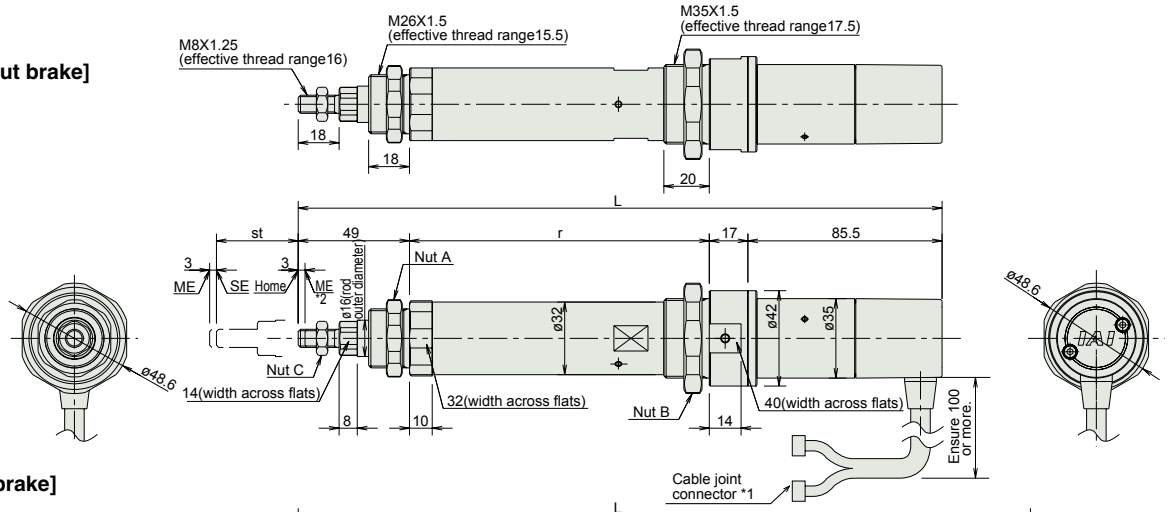


**[With brake]**

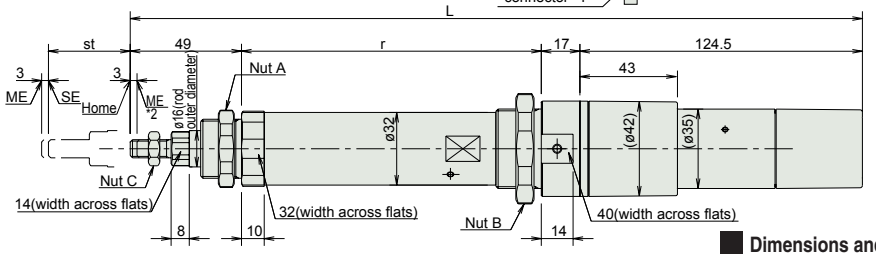


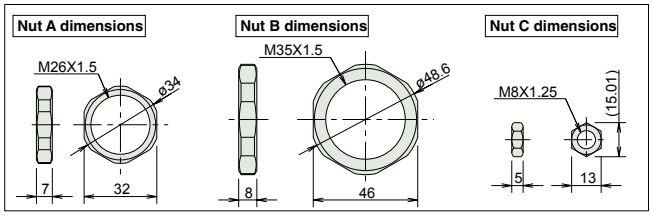


### Dimensions and Weight by Stroke

**RCA-RA3C (without brake)**

| Stroke | 50 | 100 | 150 | 200 |
|---|---|---|---|---|
| L | 283.5 | 333.5 | 383.5 | 433.5 |
| ℓ | 132 | 182 | 232 | 282 |
| Weight (kg) | 0.7 | 0.8 | 0.9 | 1.0 |

**RCA-RA3C (with brake)**

| Stroke | 50 | 100 | 150 | 200 |
|---|---|---|---|---|
| L | 322.5 | 372.5 | 422.5 | 472.5 |
| ℓ | 132 | 182 | 232 | 282 |
| Weight (kg) | 0.9 | 1.0 | 1.1 | 1.2 |

# Controller

## Applicable Controllers

RCA series actuators can be operated using the following controllers. Choose the type that best suits your specific purpose.

| Name | External view | Model | Features | Maximum number of positioning points | Input power supply | Power-supply capacity | Reference page |
|---|---|---|---|---|---|---|---|
| Positioner type | | ACON-C-20I-NP-2-0 | Supporting up to 512 positioning points | 512 points | DC24V | Rating: 1.7A, Peak: 5A | →P315 |
| Positioner type meeting safety category | | ACON-CG-20I-NP-2-0 | | | | | |
| Solenoid valve type | | ACON-CY-20I-NP-2-0 | Same control actions as those applicable to solenoid valves | 3 points | | | |
| Pulse-train input type (differential line driver specification) | | ACON-PL-20I-NP-2-0 | Pulse-train input type supporting a differential line driver | ( - ) | | | |
| Pulse-train input type (open collector specification) | | ACON-PO-20I-NP-2-0 | Pulse-train input type supporting an open collector | | | | |
| Serial communication type | | ACON-SE-20I-0-0 | Dedicated serial communication type | 64 points | | | |
| Program control type | | ASEL-C-1-20I -NP-2-0 | Programmable type capable of operating up to 2 axes | 1500 points | | | →P345 |

* The ASEL model name is based on a 1-axis specification.

# RCA-RA4C

ROBO Cylinder, Rod Type, Actuator Diameter ø37mm, 24-V Servo Motor Coupling Specification

■Model Specification Items

**RCA** – **RA4C** – **I** – [ ] – [ ] – [ ] – **A1** – [ ] – [ ]

- Series: RCA
- Type: RA4C
- Encoder type: I: Incremental specification; A: Absolute specification
- Motor type: 20: Servo motor 20W; 30: Servo motor 30W
- Lead: 12: 12mm; 6: 6mm; 3: 3mm
- Stroke: 50:50mm ~ 300:300mm (Set in 50-mm steps)
- Applicable controller: A1 : ACON, ASEL
- Cable length: N : No cable; P : 1m; S : 3m; M : 5m; X□□ : Specified length; R□□ : Robot cable
- Options: Refer to the options price list below.

* Refer to p. 31 of the front matter for details on the model specification items.

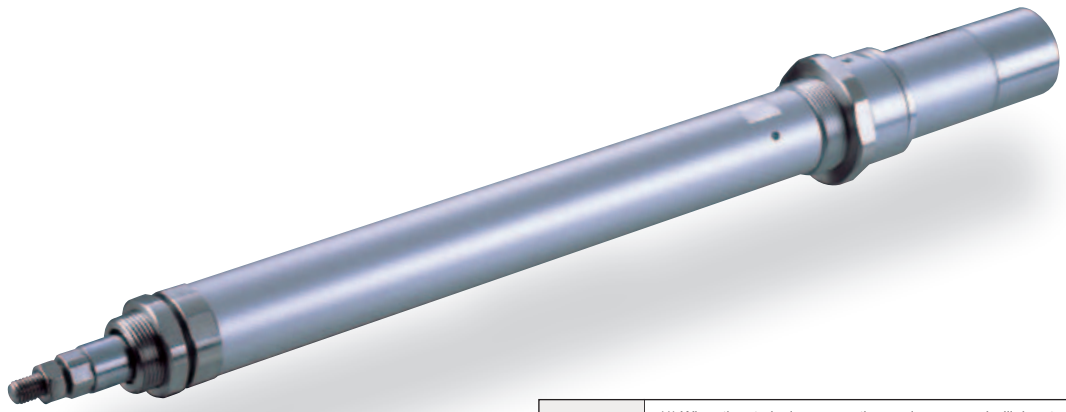

**POINT Selection Points**

(1) When the stroke increases, the maximum speed will drop to prevent the ball screw from reaching a critical speed. Use the actuator specification table below to check the maximum speed at the stroke you desire.
(2) The load capacity is based on operation at an acceleration of 0.3 G (or 0.2 G if the lead is 3). This is the maximum acceleration.
(3) The horizontal load capacity assumes use of an external guide and absence of external force applied from any direction other than the moving direction of the rod.

## Actuator Specifications

### ■Lead and Load Capacity

| Model | Motor output (W) | Lead (mm) | Maximum load capacity Horizontal (kg) | Maximum load capacity Vertical (kg) | Rated thrust (N) | Stroke (mm) |
|---|---|---|---|---|---|---|
| RCA-RA4C-①-20-12-②-A1-③-④ | 20 | 12 | 3.0 | 1.0 | 18.9 | 50 ~ 300 (Set in 50-mm steps) |
| RCA-RA4C-①-20-6-②-A1-③-④ | | 6 | 6.0 | 2.0 | 37.7 | |
| RCA-RA4C-①-20-3-②-A1-③-④ | | 3 | 12.0 | 4.0 | 75.4 | |
| RCA-RA4C-①-30-12-②-A1-③-④ | 30 | 12 | 4.0 | 1.5 | 28.3 | |
| RCA-RA4C-①-30-6-②-A1-③-④ | | 6 | 9.0 | 3.0 | 56.6 | |
| RCA-RA4C-①-30-3-②-A1-③-④ | | 3 | 18.0 | 6.5 | 113.1 | |

Explanation of numbers ① Encoder type ② Stroke ③ Cable length ④ Options

### ■Stroke and Maximum Speed

| Lead \ Stroke | 50 ~ 300 (Set in 50-mm steps) |
|---|---|
| 12 | 600 |
| 6 | 300 |
| 3 | 150 |

(Unit: mm/s)

## Actuator Specifications

| Item | Description |
|---|---|
| Drive method | Ball screw ø10mm, rolled C10 |
| Positioning repeatability | ±0.02mm |
| Backlash | 0.05mm or less |
| Base | Material: Aluminum with white alumite treatment |
| Rod diameter | ø20mm |
| Rod non-rotation accuracy | ±1.0° |
| Ambient operating temperature, humidity | 0~40°C, 85% RH or below (non-condensing) |

## Dimensions

You can download CAD drawings from our website. www.iai-robot.co.jp

2D CAD

*1 Connect the motor/encoder cables. Refer to p. 324 for details on the cables.
*2 The rod moves to the ME during home return. Pay attention to prevent contact between the rod and surrounding parts.
ME: Mechanical end
SE: Stroke end

**[Without brake]**

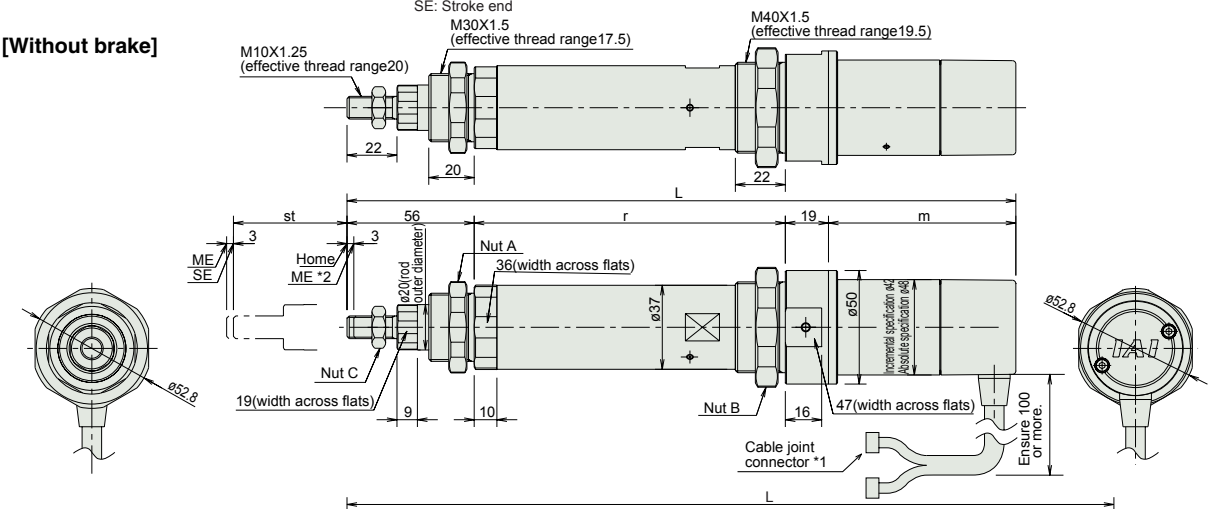


**[With brake]**

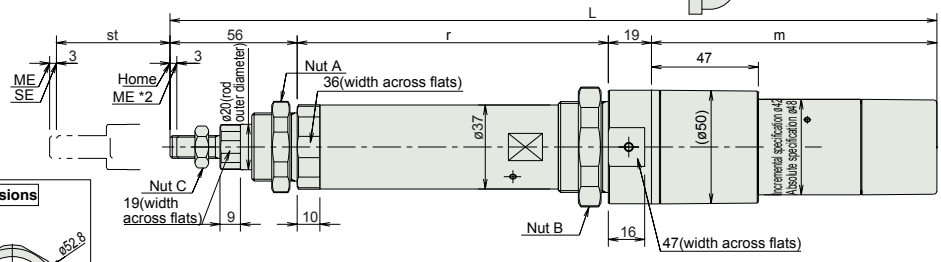


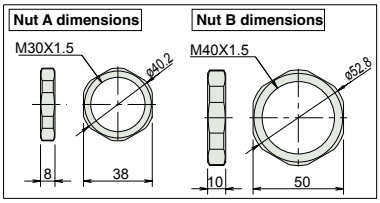


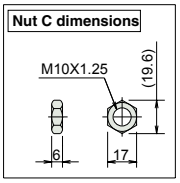


### Dimensions and Weight by Stroke

**RCA-RA4C (without brake)**

| Stroke | | | 50 | 100 | 150 | 200 | 250 | 300 |
|---|---|---|---|---|---|---|---|---|
| L | 20W | Incremental | 279.5 | 329.5 | 379.5 | 429.5 | 479.5 | 529.5 |
| | | Absolute | 292.5 | 342.5 | 392.5 | 442.5 | 492.5 | 542.5 |
| | 30W | Incremental | 294.5 | 344.5 | 394.5 | 444.5 | 494.5 | 544.5 |
| | | Absolute | 307.5 | 357.5 | 407.5 | 457.5 | 507.5 | 557.5 |
| ℓ | | | 137 | 187 | 237 | 287 | 337 | 487 |
| m | 20W | Incremental | 67.5 | | | | | |
| | | Absolute | 80.5 | | | | | |
| | 30W | Incremental | 82.5 | | | | | |
| | | Absolute | 95.5 | | | | | |
| Weight (kg) | | | 1.1 | 1.2 | 1.4 | 1.5 | 1.7 | 1.8 |

**RCA-RA4C (with brake)**

| Stroke | | | 50 | 100 | 150 | 200 | 250 | 300 |
|---|---|---|---|---|---|---|---|---|
| L | 20W | Incremental | 322.5 | 372.5 | 422.5 | 472.5 | 522.5 | 572.5 |
| | | Absolute | 335.5 | 385.5 | 435.5 | 485.5 | 535.5 | 585.5 |
| | 30W | Incremental | 337.5 | 387.5 | 437.5 | 487.5 | 537.5 | 587.5 |
| | | Absolute | 350.5 | 400.5 | 450.5 | 500.5 | 550.5 | 600.5 |
| ℓ | | | 137 | 187 | 237 | 287 | 337 | 487 |
| m | 20W | Incremental | 110.5 | | | | | |
| | | Absolute | 123.5 | | | | | |
| | 30W | Incremental | 125.5 | | | | | |
| | | Absolute | 138.5 | | | | | |
| Weight (kg) | | | 1.3 | 1.4 | 1.6 | 1.7 | 1.9 | 2.0 |

# Controller

## Applicable Controllers

RCA series actuators can be operated using the following controllers. Choose the type that best suits your specific purpose.

| Name | External view | Model | Features | Maximum number of positioning points | Input power supply | Power-supply capacity | Reference page |
|---|---|---|---|---|---|---|---|
| Positioner type | | ACON-C-20I-NP-2-0<br>ACON-C-30I-NP-2-0 | Supporting up to 512 positioning points | 512 points | DC24V | 20W<br>Rating: 1.3A,<br>Peak: 3.7A<br><br>30W<br>Rating: 1.3A,<br>Peak: 4.2A | →P315 |
| Positioner type meeting safety category | | ACON-CG-20I-NP-2-0<br>ACON-CG-30I-NP-2-0 | | | | | |
| Solenoid valve type | | ACON-CY-20I-NP-2-0<br>ACON-CY-30I-NP-2-0 | Same control actions as those applicable to solenoid valves | 3 points | | | |
| Pulse-train input type (differential line driver specification) | | ACON-PL-20I-NP-2-0<br>ACON-PL-30I-NP-2-0 | Pulse-train input type supporting a differential line driver | ( - ) | | | |
| Pulse-train input type (open collector specification) | | ACON-PO-20I-NP-2-0<br>ACON-PO-30I-NP-2-0 | Pulse-train input type supporting an open collector | | | | |
| Serial communication type | | ACON-SE-20I-0-0<br>ACON-SE-30I-0-0 | Dedicated serial communication type | 64 points | | | |
| Program control type | | ASEL-C-1-20①-NP-2-0<br>ASEL-C-1-30①-NP-2-0 | Programmable type capable of operating up to 2 axes | 1500 points | | | →P345 |

* The ASEL model name is based on a 1-axis specification.
* ① indicates the encoder type (I: Incremental / A: Absolute).

# RCA-RA3D

ROBO Cylinder, Rod Type, Actuator Diameter ø32mm, 24-V Servo Motor
Built-In (Direct-Coupled) Motor Specification

■Model Specification Items

| RCA | RA3D | I | 20 | ☐ | ☐ | A1 | ☐ | ☐ |
|---|---|---|---|---|---|---|---|---|
| Series | Type | Encoder type | Motor type | Lead | Stroke | Applicable controller | Cable length | Options |
| | | I: Incremental specification | 20: Servo motor 20W | 10: 10mm<br>5: 5mm<br>2.5: 2.5mm | 50:50mm<br>~<br>200:200mm<br>(Set in 50-mm steps) | A1 : ACON<br>ASEL | N : No cable<br>P : 1m<br>S : 3m<br>M : 5m<br>X☐☐ : Specified length<br>R☐☐ : Robot cable | Refer to the options price list below. |

* Refer to p. 31 of the front matter for details on the model specification items.

**POINT Selection Points**

(1) When the stroke increases, the maximum speed will drop to prevent the ball screw from reaching a critical speed. Use the actuator specification table below to check the maximum speed at the stroke you desire.
(2) The load capacity is based on operation at an acceleration of 0.3 G (or 0.2 G if the lead is 2.5). The maximum acceleration is 0.3 G (or 0.2 G if the lead is 2.5).
(3) The horizontal load capacity assumes use of an external guide and absence of external force applied from any direction other than the moving direction of the rod.
(4) Take note that the built-in motor specification does not come with brake.

## Actuator Specifications

### ■Lead and Load Capacity

| Model | Motor output (W) | Lead (mm) | Maximum load capacity Horizontal (kg) | Maximum load capacity Vertical (kg) | Rated thrust (N) | Stroke (mm) |
|---|---|---|---|---|---|---|
| RCA-RA3D- I -20-10- ① - A1- ② - ③ | 20 | 10 | 4.0 | 1.5 | 36.2 | 50 ~ 200 (Set in 50-mm steps) |
| RCA-RA3D- I -20-5- ① - A1- ② - ③ | | 5 | 9.0 | 3.0 | 72.4 | |
| RCA-RA3D- I -20-2.5- ① - A1- ② - ③ | | 2.5 | 18.0 | 6.5 | 144.8 | |

Explanation of numbers ① Stroke ② Cable length ③ Options

### ■Stroke and Maximum Speed

| Lead \ Stroke | 50 ~ 200 (Set in 50-mm steps) |
|---|---|
| 10 | 500 |
| 5 | 250 |
| 2.5 | 125 |

(Unit: mm/s)

## Actuator Specifications

| Item | Description |
|---|---|
| Drive method | Ball screw ø8mm, rolled C10 |
| Positioning repeatability | ±0.02mm |
| Backlash | 0.05mm or less |
| Base | Material: Aluminum with white alumite treatment |
| Rod diameter | ø16mm |
| Rod non-rotation accuracy | ±1.0° |
| Ambient operating temperature, humidity | 0~40°C, 85% RH or below (non-condensing) |

## Dimensions

You can download CAD drawings from our website. www.iai-robot.co.jp

2D CAD

*1 Connect the motor/encoder cables. Refer to p. 324 for details on the cables.
*2 The rod moves to the ME during home return. Pay attention to prevent contact between the rod and surrounding parts.
ME: Mechanical end
SE: Stroke end

**[Without brake]**

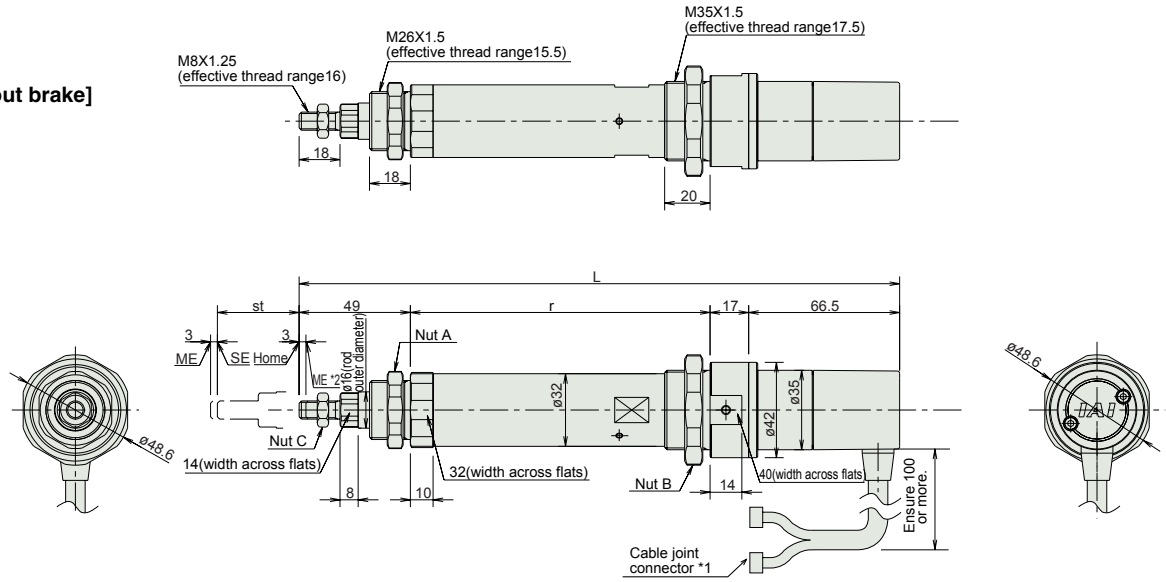


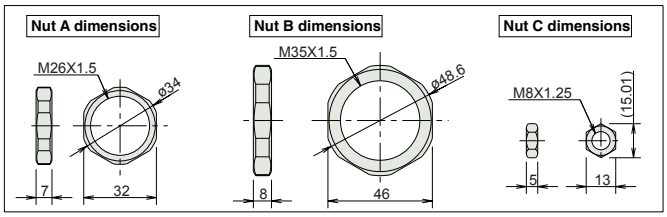


### Dimensions and Weight by Stroke

RCA-RA3D (without brake)

| Stroke | 50 | 100 | 150 | 200 |
|---|---|---|---|---|
| L | 264.5 | 314.5 | 364.5 | 414.5 |
| ℓ | 132 | 182 | 232 | 282 |
| Weight (kg) | 0.7 | 0.8 | 0.9 | 1.0 |

**The RCA-RA3D type does not come with brake.**

# Controller

## Applicable Controllers

RCA series actuators can be operated using the following controllers. Choose the type that best suits your specific purpose.

| Name | External view | Model | Features | Maximum number of positioning points | Input power supply | Power-supply capacity | Reference page |
|---|---|---|---|---|---|---|---|
| Positioner type | | ACON-C-20I-NP-2-0 | Supporting up to 512 positioning points | 512 points | DC24V | Rating: 1.7A, Peak: 5A | →P315 |
| Positioner type meeting safety category | | ACON-CG-20I-NP-2-0 | | | | | |
| Solenoid valve type | | ACON-CY-20I-NP-2-0 | Same control actions as those applicable to solenoid valves | 3 points | | | |
| Pulse-train input type (differential line driver specification) | | ACON-PL-20I-NP-2-0 | Pulse-train input type supporting a differential line driver | ( - ) | | | |
| Pulse-train input type (open collector specification) | | ACON-PO-20I-NP-2-0 | Pulse-train input type supporting an open collector | | | | |
| Serial communication type | | ACON-SE-20I-0-0 | Dedicated serial communication type | 64 points | | | |
| Program control type | | ASEL-C-1-20I-NP-2-0 | Programmable type capable of operating up to 2 axes | 1500 points | | | →P345 |

* The ASEL model name is based on a 1-axis specification.

# RCA-RA4D

ROBO Cylinder, Rod Type, Actuator Diameter ø37mm, 24-V Servo Motor
Built-In (Direct-Coupled) Motor Specification

■Model Specification Items

**RCA** – **RA4D** – **I** – □ – □ – □ – **A1** – □ – □

- Series: RCA
- Type: RA4D
- Encoder type: I: Incremental specification; A: Absolute specification
- Motor type: 20: Servo motor 20W; 30: Servo motor 30W
- Lead: 12: 12mm; 6: 6mm; 3: 3mm
- Stroke: 50:50mm ~ 300:300mm (Set in 50-mm steps)
- Applicable controller: A1: ACON, ASEL
- Cable length: N: No cable; P: 1m; S: 3m; M: 5m; X□□: Specified length; R□□: Robot cable
- Options: Refer to the options price list below.

* Refer to p. 31 of the front matter for details on the model specification items.

**POINT Selection Points**

(1) When the stroke increases, the maximum speed will drop to prevent the ball screw from reaching a critical speed. Use the actuator specification table below to check the maximum speed at the stroke you desire.
(2) The load capacity is based on operation at an acceleration of 0.3 G (or 0.2 G if the lead is 3). The maximum acceleration is 0.3 G (or 0.2 G if the lead is 2.5).
(3) The horizontal load capacity assumes use of an external guide and absence of external force applied from any direction other than the moving direction of the rod.

## Actuator Specifications

### ■Lead and Load Capacity

| Model | Motor output (W) | Lead (mm) | Maximum load capacity Horizontal (kg) | Maximum load capacity Vertical (kg) | Rated thrust (N) | Stroke (mm) |
|---|---|---|---|---|---|---|
| RCA-RA4D-①-20-12-②-A1-③-④ | 20 | 12 | 3.0 | 1.0 | 18.9 | 50 ~ 300 (Set in 50-mm steps) |
| RCA-RA4D-①-20-6-②-A1-③-④ | | 6 | 6.0 | 2.0 | 37.7 | |
| RCA-RA4D-①-20-3-②-A1-③-④ | | 3 | 12.0 | 4.0 | 75.4 | |
| RCA-RA4D-①-30-12-②-A1-③-④ | 30 | 12 | 4.0 | 1.5 | 28.3 | |
| RCA-RA4D-①-30-6-②-A1-③-④ | | 6 | 9.0 | 3.0 | 56.6 | |
| RCA-RA4D-①-30-3-②-A1-③-④ | | 3 | 18.0 | 6.5 | 113.1 | |

Explanation of numbers ① Encoder type ② Stroke ③ Cable length ④ Options

### ■Stroke and Maximum Speed

| Lead \ Stroke | 50 ~ 300 (Set in 50-mm steps) |
|---|---|
| 12 | 600 |
| 6 | 300 |
| 3 | 150 |

(Unit: mm/s)

## Actuator Specifications

| Item | Description |
|---|---|
| Drive method | Ball screw ø10mm, rolled C10 |
| Positioning repeatability | ±0.02mm |
| Backlash | 0.05mm or less |
| Base | Material: Aluminum with white alumite treatment |
| Rod diameter | ø20mm |
| Rod non-rotation accuracy | ±1.0° |
| Ambient operating temperature, humidity | 0~40°C, 85% RH or below (non-condensing) |

## Dimensions

You can download CAD drawings from our website. www.iai-robot.co.jp

*1 Connect the motor/encoder cables. Refer to p. 324 for details on the cables.
*2 The rod moves to the ME during home return. Pay attention to prevent contact between the rod and surrounding parts.
ME: Mechanical end
SE: Stroke end

2D CAD

**[Without brake]**

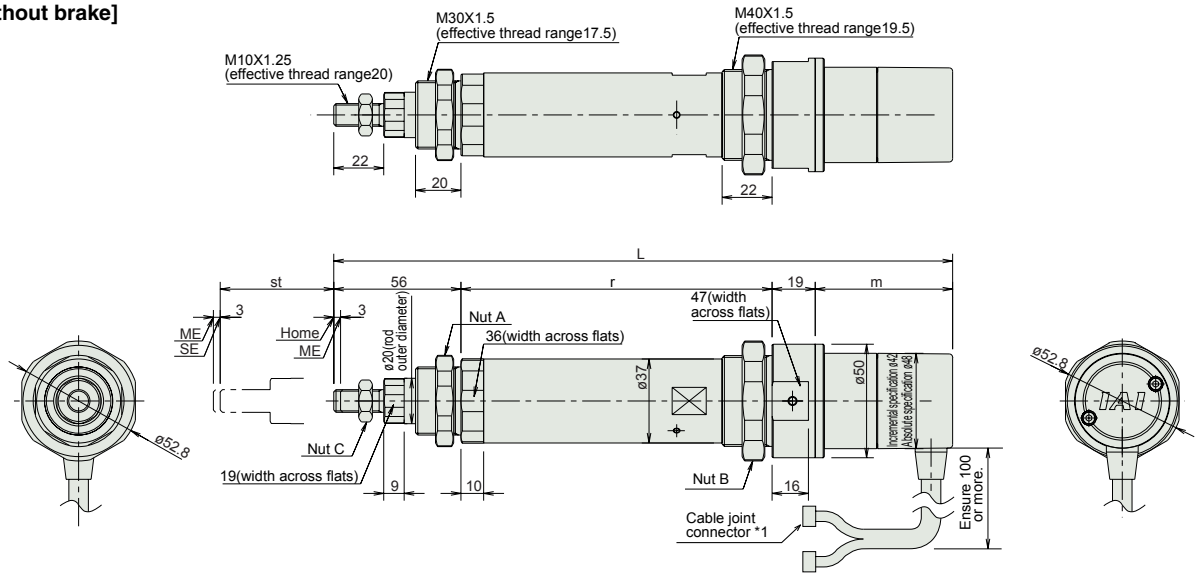


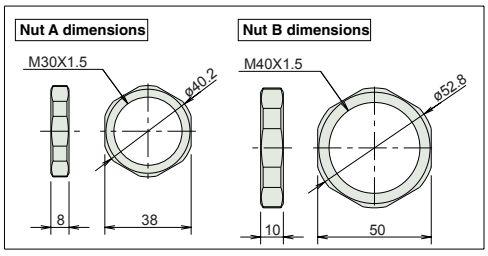


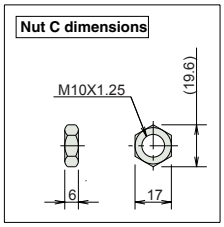


### Dimensions and Weight by Stroke

**RCA-RA4D (without brake)**

| Stroke | | | 50 | 100 | 150 | 200 | 250 | 300 |
|---|---|---|---|---|---|---|---|---|
| L | 20W | Incremental | 257.5 | 307.5 | 357.5 | 407.5 | 457.5 | 507.5 |
| | | Absolute | 270.5 | 320.5 | 370.5 | 420.5 | 470.5 | 520.5 |
| | 30W | Incremental | 272.5 | 322.5 | 372.5 | 422.5 | 472.5 | 522.5 |
| | | Absolute | 285.5 | 335.5 | 385.5 | 435.5 | 485.5 | 535.5 |
| ℓ | | | 137 | 187 | 237 | 287 | 337 | 487 |
| m | 20W | Incremental | 45.5 | | | | | |
| | | Absolute | 58.5 | | | | | |
| | 30W | Incremental | 60.5 | | | | | |
| | | Absolute | 73.5 | | | | | |
| Weight (kg) | | | 1.1 | 1.2 | 1.3 | 1.5 | 1.6 | 1.8 |

**The RCA-RA4D type does not come with brake.**

# Controller

## Applicable Controllers

RCA series actuators can be operated using the following controllers. Choose the type that best suits your specific purpose.

| Name | External view | Model | Features | Maximum number of positioning points | Input power supply | Power-supply capacity | Reference page |
|---|---|---|---|---|---|---|---|
| Positioner type | | ACON-C-20I-NP-2-0<br>ACON-C-30I-NP-2-0 | Supporting up to 512 positioning points | 512 points | DC24V | 20W<br>Rating: 1.3A,<br>Peak: 3.7A<br><br>30W<br>Rating: 1.3A,<br>Peak: 4.2A | →P315 |
| Positioner type meeting safety category | | ACON-CG-20I-NP-2-0<br>ACON-CG-30I-NP-2-0 | | | | | |
| Solenoid valve type | | ACON-CY-20I-NP-2-0<br>ACON-CY-30I-NP-2-0 | Same control actions as those applicable to solenoid valves | 3 points | | | |
| Pulse-train input type (differential line driver specification) | | ACON-PL-20I-NP-2-0<br>ACON-PL-30I-NP-2-0 | Pulse-train input type supporting a differential line driver | ( - ) | | | |
| Pulse-train input type (open collector specification) | | ACON-PO-20I-NP-2-0<br>ACON-PO-30I-NP-2-0 | Pulse-train input type supporting an open collector | | | | |
| Serial communication type | | ACON-SE-20I-0-0<br>ACON-SE-30I-0-0 | Dedicated serial communication type | 64 points | | | |
| Program control type | | ASEL-C-1-20①-NP-2-0<br>ASEL-C-1-30①-NP-2-0 | Programmable type capable of operating up to 2 axes | 1500 points | | | →P345 |

* The ASEL model name is based on a 1-axis specification.
* ① indicates the encoder type (I: Incremental / A: Absolute).

# RCA-RA3R

ROBO Cylinder, Rod Type, Actuator Diameter ø32mm, 24-V Servo Motor
Motor Reversing Specification

■Model Specification Items

| RCA | RA3R | I | 20 | ☐ | ☐ | A1 | ☐ | ☐ |
|---|---|---|---|---|---|---|---|---|
| Series | Type | Encoder type<br>I: Incremental specification | Motor type<br>20: Servo motor 20W | Lead<br>10: 10mm<br>5: 5mm<br>2.5: 2.5mm | Stroke<br>50:50mm<br>~<br>200:200mm<br>(Set in 50-mm steps) | Applicable controller<br>A1 : ACON<br>ASEL | Cable length<br>N : No cable<br>P : 1m<br>S : 3m<br>M : 5m<br>X□□ : Specified length<br>R□□ : Robot cable | Options<br>Refer to the options price list below. |

* Refer to p. 31 of the front matter for details on the model specification items.

POINT Selection Points

(1) When the stroke increases, the maximum speed will drop to prevent the ball screw from reaching a critical speed. Use the actuator specification table below to check the maximum speed at the stroke you desire.
(2) The load capacity is based on operation at an acceleration of 0.3 G (or 0.2 G if the lead is 2.5). The maximum acceleration is 0.3 G (or 0.2 G if the lead is 2.5).
(3) The horizontal load capacity assumes use of an external guide and absence of external force applied from any direction other than the moving direction of the rod.

## Actuator Specifications

### ■Lead and Load Capacity

| Model | Motor output (W) | Lead (mm) | Maximum load capacity Horizontal (kg) | Maximum load capacity Vertical (kg) | Rated thrust (N) | Stroke (mm) |
|---|---|---|---|---|---|---|
| RCA-RA3R- I -20-10- ① - A1- ② - ③ | 20 | 10 | 4.0 | 1.5 | 36.2 | 50 ~ 200 (Set in 50-mm steps) |
| RCA-RA3R- I -20-5- ① - A1- ② - ③ | | 5 | 9.0 | 3.0 | 72.4 | |
| RCA-RA3R- I -20-2.5- ① - A1- ② - ③ | | 2.5 | 18.0 | 6.5 | 144.8 | |

Explanation of numbers ① Stroke ② Cable length ③ Options

### ■Stroke and Maximum Speed

| Lead \ Stroke | 50 ~ 200 (Set in 50-mm steps) |
|---|---|
| 10 | 500 |
| 5 | 250 |
| 2.5 | 125 |

(Unit: mm/s)

## Actuator Specifications

| Item | Description |
|---|---|
| Drive method | Ball screw ø8mm, rolled C10 |
| Positioning repeatability | ±0.02mm |
| Backlash | 0.05mm or less |
| Base | Material: Aluminum with white alumite treatment |
| Rod diameter | ø16mm |
| Rod non-rotation accuracy | ±1.0° |
| Ambient operating temperature, humidity | 0~40°C, 85% RH or below (non-condensing) |

## Dimensions

You can download CAD drawings from our website. www.iai-robot.co.jp

2D CAD

*1 Connect the motor/encoder cables. Refer to p. 324 for details on the cables.
*2 The rod moves to the ME during home return. Pay attention to prevent contact between the rod and surrounding parts.
ME: Mechanical end
SE: Stroke end

**[Without brake]**

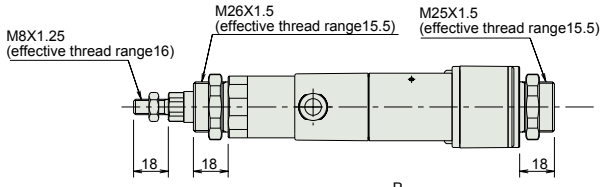


**[With brake]**

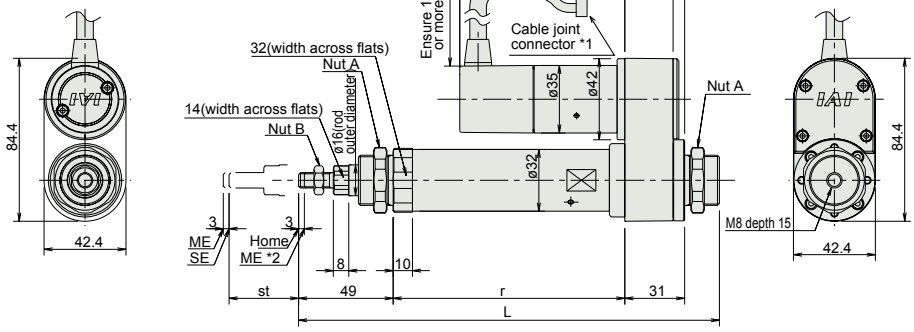


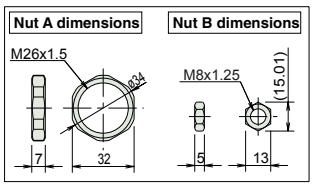


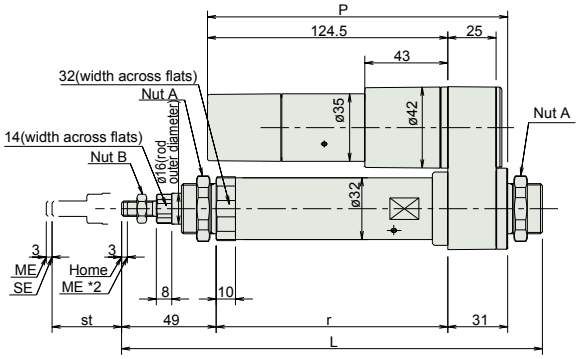


### Dimensions and Weight by Stroke

**RCA-RA3R (without brake)**

| Stroke | 50 | 100 | 150 | 200 |
|---|---|---|---|---|
| L | 218 | 268 | 318 | 368 |
| ℓ | 120 | 170 | 220 | 270 |
| P | 116.5 | | | |
| Weight (kg) | 0.8 | 0.9 | 1.0 | 1.1 |

**RCA-RA3R (with brake)**

| Stroke | 50 | 100 | 150 | 200 |
|---|---|---|---|---|
| L | 218 | 268 | 318 | 368 |
| ℓ | 120 | 170 | 220 | 270 |
| P | 155.5 | | | |
| Weight (kg) | 1.0 | 1.1 | 1.2 | 1.3 |

# Controller

## Applicable Controllers

RCA series actuators can be operated using the following controllers. Choose the type that best suits your specific purpose.

| Name | External view | Model | Features | Maximum number of positioning points | Input power supply | Power-supply capacity | Reference page |
|---|---|---|---|---|---|---|---|
| Positioner type |  | ACON-C-20I-NP-2-0 | Supporting up to 512 positioning points | 512 points | DC24V | Rating: 1.7A, Peak: 5A | →P315 |
| Positioner type meeting safety category | | ACON-CG-20I-NP-2-0 | | | | | |
| Solenoid valve type |  | ACON-CY-20I-NP-2-0 | Same control actions as those applicable to solenoid valves | 3 points | | | |
| Pulse-train input type (differential line driver specification) |  | ACON-PL-20I-NP-2-0 | Pulse-train input type supporting a differential line driver | ( - ) | | | |
| Pulse-train input type (open collector specification) | | ACON-PO-20I-NP-2-0 | Pulse-train input type supporting an open collector | | | | |
| Serial communication type |  | ACON-SE-20I-0-0 | Dedicated serial communication type | 64 points | | | |
| Program control type |  | ASEL-C-1-20I-NP-2-0 | Programmable type capable of operating up to 2 axes | 1500 points | | | →P345 |

* The ASEL model name is based on a 1-axis specification.

# RCA-RA4R

ROBO Cylinder, Rod Type, Actuator Diameter ø37mm, 24-V Servo Motor
Motor Reversing Specification

■Model Specification Items

| RCA | RA4R | I | ☐ | ☐ | ☐ | A1 | ☐ | ☐ |
|---|---|---|---|---|---|---|---|---|
| Series | Type | Encoder type | Motor type | Lead | Stroke | Applicable controller | Cable length | Options |
| | | I: Incremental specification<br>A: Absolute specification | 20: Servo motor 20W<br>30: Servo motor 30W | 12: 12mm<br>6: 6mm<br>3: 3mm | 50:50mm<br>~<br>300:300mm<br>(Set in 50-mm steps) | A1 : ACON<br>ASEL | N : No cable<br>P : 1m<br>S : 3m<br>M : 5m<br>X□□ : Specified length<br>R□□ : Robot cable | Refer to the options price list below. |

* Refer to p. 31 of the front matter for details on the model specification items.

**POINT Selection Points**

(1) When the stroke increases, the maximum speed will drop to prevent the ball screw from reaching a critical speed. Use the actuator specification table below to check the maximum speed at the stroke you desire.
(2) The load capacity is based on operation at an acceleration of 0.3 G (or 0.2 G if the lead is 3). The maximum acceleration is 0.3 G (or 0.2 G if the lead is 3).
(3) The horizontal load capacity assumes use of an external guide and absence of external force applied from any direction other than the moving direction of the rod.

## Actuator Specifications

### ■Lead and Load Capacity

| Model | Motor output (W) | Lead (mm) | Maximum load capacity Horizontal (kg) | Maximum load capacity Vertical (kg) | Rated thrust (N) | Stroke (mm) |
|---|---|---|---|---|---|---|
| RCA-RA4R-①-20-12-②-A1-③-④ | 20 | 12 | 3.0 | 1.0 | 18.9 | 50 ~ 300 (Set in 50-mm steps) |
| RCA-RA4R-①-20-6-②-A1-③-④ | | 6 | 6.0 | 2.0 | 37.7 | |
| RCA-RA4R-①-20-3-②-A1-③-④ | | 3 | 12.0 | 4.0 | 75.4 | |
| RCA-RA4R-①-30-12-②-A1-③-④ | 30 | 12 | 4.0 | 1.5 | 28.3 | |
| RCA-RA4R-①-30-6-②-A1-③-④ | | 6 | 9.0 | 3.0 | 56.6 | |
| RCA-RA4R-①-30-3-②-A1-③-④ | | 3 | 18.0 | 6.5 | 113.1 | |

Explanation of numbers ① Encoder type ② Stroke ③ Cable length ④ Options

### ■Stroke and Maximum Speed

| Lead \ Stroke | 50 ~ 300 (Set in 50-mm steps) |
|---|---|
| 12 | 600 |
| 6 | 300 |
| 3 | 150 |

(Unit: mm/s)

## Actuator Specifications

| Item | Description |
|---|---|
| Drive method | Ball screw ø10mm, rolled C10 |
| Positioning repeatability | ±0.02mm |
| Backlash | 0.05mm or less |
| Base | Material: Aluminum with white alumite treatment |
| Rod diameter | ø20mm |
| Rod non-rotation accuracy | ±1.0° |
| Ambient operating temperature, humidity | 0~40°C, 85% RH or below (non-condensing) |

## Dimensions

You can download CAD drawings from our website. www.iai-robot.co.jp

2D CAD

### [Without brake]

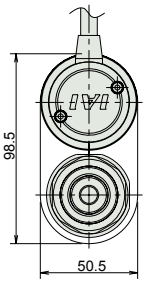


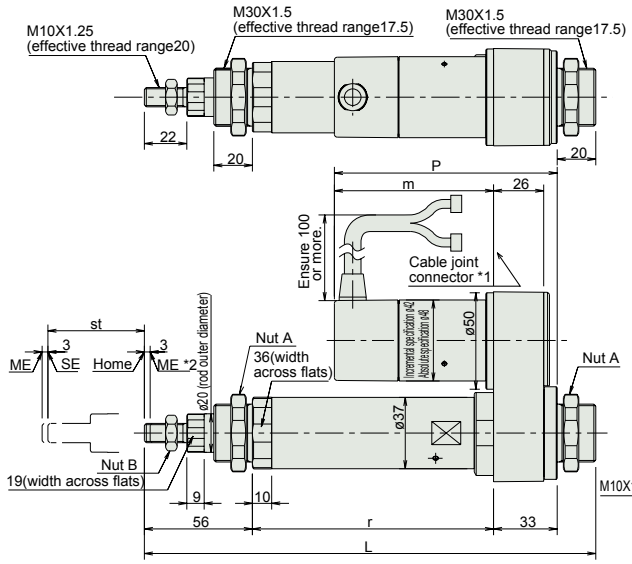


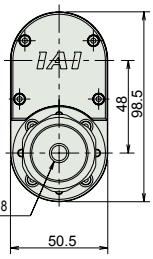


### [With brake]

*1 Connect the motor/encoder cables. Refer to p. 324 for details on the cables.
*2 The rod moves to the ME during home return. Pay attention to prevent contact between the rod and surrounding parts.
ME: Mechanical end
SE: Stroke end

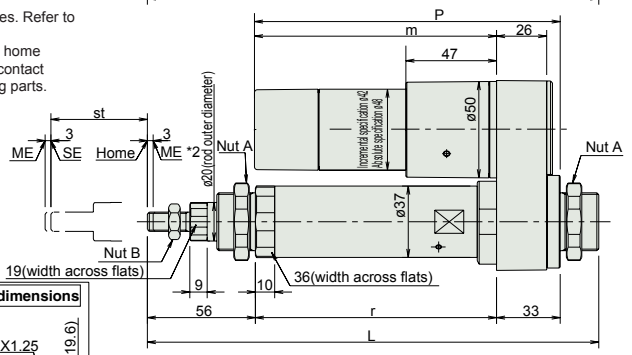


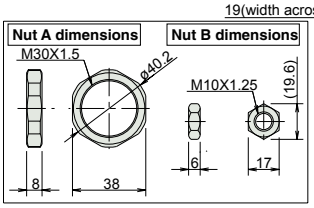


### Dimensions and Weight by Stroke

**RCA-RA4R (without brake)**

| Stroke | | | 50 | 100 | 150 | 200 | 250 | 300 |
|---|---|---|---|---|---|---|---|---|
| L | 20W | Incremental | 234 | 284 | 334 | 384 | 434 | 484 |
| | | Absolute | 234 | 284 | 334 | 384 | 434 | 484 |
| | 30W | Incremental | 234 | 284 | 334 | 384 | 434 | 484 |
| | | Absolute | 234 | 284 | 334 | 384 | 434 | 484 |
| ℓ | | | 125 | 175 | 225 | 275 | 325 | 375 |
| m | 20W | Incremental | 67.5 | | | | | |
| | | Absolute | 80.5 | | | | | |
| | 30W | Incremental | 82.5 | | | | | |
| | | Absolute | 95.5 | | | | | |
| P | 20W | Incremental | 100.5 | | | | | |
| | | Absolute | 113.5 | | | | | |
| | 30W | Incremental | 115.5 | | | | | |
| | | Absolute | 128.5 | | | | | |
| Weight (kg) | | | 1.2 | 1.4 | 1.5 | 1.7 | 1.8 | 2.0 |

**RCA-RA4R (with brake)**

| Stroke | | | 50 | 100 | 150 | 200 | 250 | 300 |
|---|---|---|---|---|---|---|---|---|
| L | 20W | Incremental | 234 | 284 | 334 | 384 | 434 | 484 |
| | | Absolute | 234 | 284 | 334 | 384 | 434 | 484 |
| | 30W | Incremental | 234 | 284 | 334 | 384 | 434 | 484 |
| | | Absolute | 234 | 284 | 334 | 384 | 434 | 484 |
| ℓ | | | 125 | 175 | 225 | 275 | 325 | 375 |
| m | 20W | Incremental | 110.5 | | | | | |
| | | Absolute | 123.5 | | | | | |
| | 30W | Incremental | 125.5 | | | | | |
| | | Absolute | 138.5 | | | | | |
| P | 20W | Incremental | 143.5 | | | | | |
| | | Absolute | 156.5 | | | | | |
| | 30W | Incremental | 158.5 | | | | | |
| | | Absolute | 171.5 | | | | | |
| Weight (kg) | | | 1.4 | 1.6 | 1.7 | 1.9 | 2.0 | 2.2 |

# Controller

## Applicable Controllers

RCA series actuators can be operated using the following controllers. Choose the type that best suits your specific purpose.

| Name | External view | Model | Features | Maximum number of positioning points | Input power supply | Power-supply capacity | Reference page |
|---|---|---|---|---|---|---|---|
| Positioner type | | ACON-C-20I-NP-2-0<br>ACON-C-30I-NP-2-0 | Supporting up to 512 positioning points | 512 points | DC24V | Rating: 1.7A, Peak: 5A | →P315 |
| Positioner type meeting safety category | | ACON-CG-20I-NP-2-0<br>ACON-CG-30I-NP-2-0 | | | | | |
| Solenoid valve type | | ACON-CY-20I-NP-2-0<br>ACON-CY-30I-NP-2-0 | Same control actions as those applicable to solenoid valves | 3 points | | | |
| Pulse-train input type (differential line driver specification) | | ACON-PL-20I-NP-2-0<br>ACON-PL-30I-NP-2-0 | Pulse-train input type supporting a differential line driver | ( - ) | | | |
| Pulse-train input type (open collector specification) | | ACON-PO-20I-NP-2-0<br>ACON-PO-30I-NP-2-0 | Pulse-train input type supporting an open collector | | | | |
| Serial communication type | | ACON-SE-20I-0-0<br>ACON-SE-30I-0-0 | Dedicated serial communication type | 64 points | | | |
| Program control type | | ASEL-C-1-20①-NP-2-0<br>ASEL-C-1-30①-NP-2-0 | Programmable type capable of operating up to 2 axes | 1500 points | | | →P345 |

* The ASEL model name is based on a 1-axis specification.
* ① indicates the encoder type (I: Incremental / A: Absolute).

# RCA-RGS3C

ROBO Cylinder, Rod Type with Single Guide, Actuator Diameter ø32mm, 24-V Servo Motor Coupling Specification

■Model Specification Items

**RCA – RGS3C – I – 20 – □ – □ – A1 – □ – □**

| Series | Type | Encoder type | Motor type | Lead | Stroke | Applicable controller | Cable length | Options |
|---|---|---|---|---|---|---|---|---|
| | | I: Incremental specification | 20: Servo motor 20W | 10: 10mm<br>5: 5mm<br>2.5: 2.5mm | 50:50mm<br>~<br>200:200mm<br>(Set in 50-mm steps) | A1 : ACON<br>ASEL | N : No cable<br>P : 1m<br>S : 3m<br>M : 5m<br>X□□ : Specified length<br>R□□ : Robot cable | Refer to the options price list below. |

* Refer to p. 31 of the front matter for details on the model specification items.

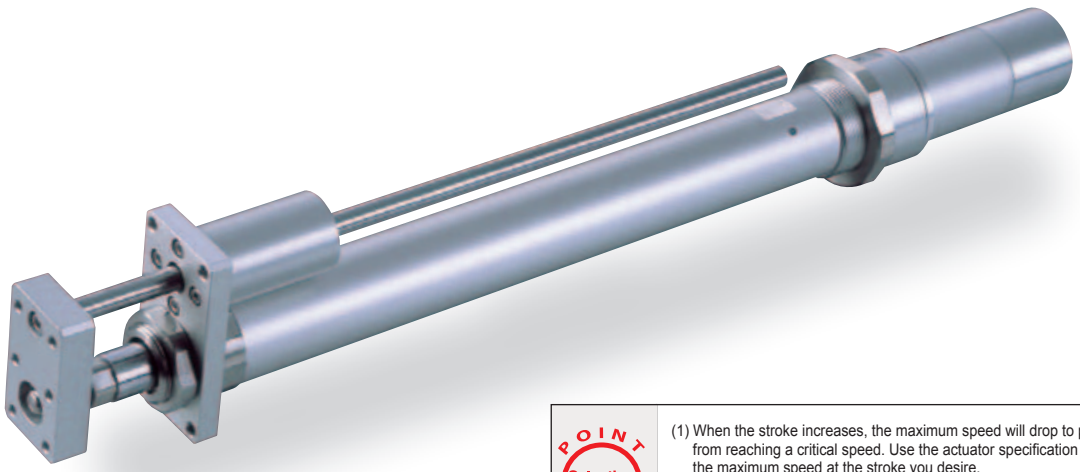

**POINT Selection Points**

(1) When the stroke increases, the maximum speed will drop to prevent the ball screw from reaching a critical speed. Use the actuator specification table below to check the maximum speed at the stroke you desire.
(2) The load capacity is based on operation at an acceleration of 0.3 G (or 0.2 G if the lead is 2.5). This is the maximum acceleration.
(3) The horizontal load capacity assumes use of an external guide.

## Actuator Specifications

### ■Lead and Load Capacity

| Model | Motor output (W) | Lead (mm) | Maximum load capacity Horizontal (kg) | Maximum load capacity Vertical (kg) | Rated thrust (N) | Stroke (mm) |
|---|---|---|---|---|---|---|
| RCA-RGS3C- I -20-10- ① - A1- ② - ③ | 20 | 10 | 4.0 | 1.2 | 36.2 | 50 ~ 200 (Set in 50-mm steps) |
| RCA-RGS3C- I -20-5- ① - A1- ② - ③ | | 5 | 9.0 | 2.7 | 72.4 | |
| RCA-RGS3C- I -20-2.5- ① - A1- ② - ③ | | 2.5 | 18.0 | 6.2 | 144.8 | |

Explanation of numbers ① Stroke ② Cable length ③ Options

### ■Stroke and Maximum Speed

| Lead \ Stroke | 50 ~ 200 (Set in 50-mm steps) |
|---|---|
| 10 | 500 |
| 5 | 250 |
| 2.5 | 125 |

(Unit: mm/s)

## Actuator Specifications

| Item | Description |
|---|---|
| Drive method | Ball screw ø8mm, rolled C10 |
| Positioning repeatability | ±0.02mm |
| Backlash | 0.05mm or less |
| Guide | Single guide, guide rod diameter ø8mm, ball bush type |
| Rod diameter | ø16mm |
| Rod non-rotation accuracy | ±0.05° |
| Ambient operating temperature, humidity | 0~40°C, 85% RH or below (non-condensing) |

## Dimensions

You can download CAD drawings from our website. www.iai-robot.co.jp

2D CAD

*1 Connect the motor/encoder cables. Refer to p. 324 for details on the cables.
*2 The rod moves to the ME during home return. Pay attention to prevent contact between the rod and surrounding parts.
ME: Mechanical end
SE: Stroke end

**[Without brake]**

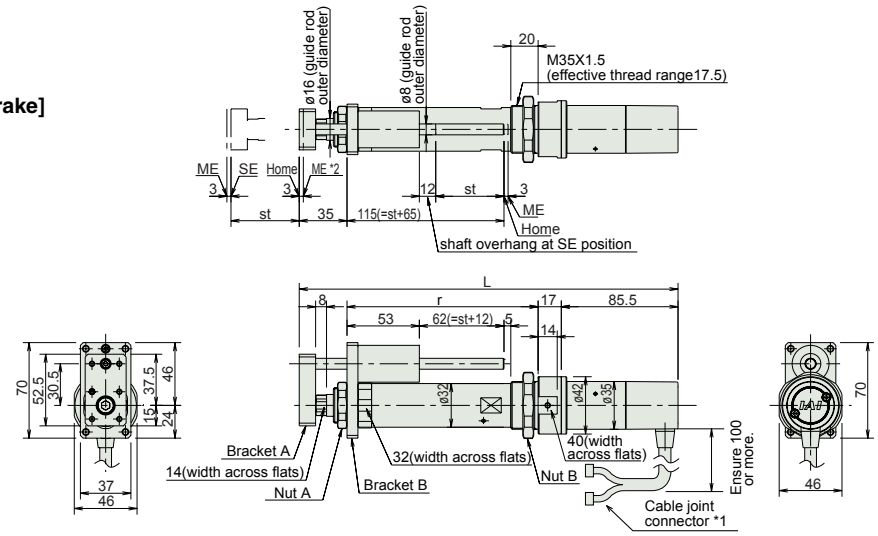


**[With brake]**

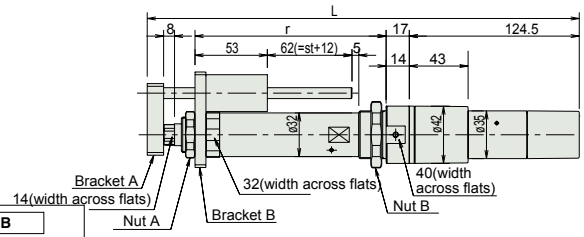


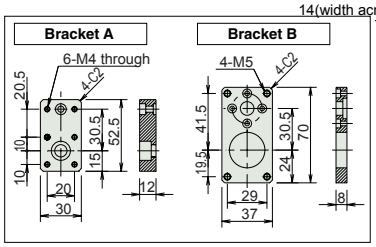


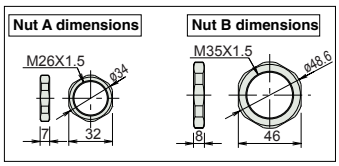


### Dimensions and Weight by Stroke

**RCA-RGS3C (without brake)**

| Stroke | 50 | 100 | 150 | 200 |
|---|---|---|---|---|
| L | 277.5 | 327.5 | 377.5 | 427.5 |
| ℓ | 140 | 190 | 240 | 290 |
| Weight (kg) | 0.9 | 1.1 | 1.2 | 1.3 |

**RCA-RGS3C (with brake)**

| Stroke | 50 | 100 | 150 | 200 |
|---|---|---|---|---|
| L | 316.5 | 366.5 | 416.5 | 466.5 |
| ℓ | 140 | 190 | 240 | 290 |
| Weight (kg) | 1.1 | 1.3 | 1.4 | 1.5 |

# Controller

## Applicable Controllers

RCA series actuators can be operated using the following controllers. Choose the type that best suits your specific purpose.

| Name | External view | Model | Features | Maximum number of positioning points | Input power supply | Power-supply capacity | Reference page |
|---|---|---|---|---|---|---|---|
| Positioner type | | ACON-C-20I-NP-2-0 | Supporting up to 512 positioning points | 512 points | DC24V | Rating: 1.7A, Peak: 5A | →P315 |
| Positioner type meeting safety category | | ACON-CG-20I-NP-2-0 | | | | | |
| Solenoid valve type | | ACON-CY-20I-NP-2-0 | Same control actions as those applicable to solenoid valves | 3 points | | | |
| Pulse-train input type (differential line driver specification) | | ACON-PL-20I-NP-2-0 | Pulse-train input type supporting a differential line driver | ( - ) | | | |
| Pulse-train input type (open collector specification) | | ACON-PO-20I-NP-2-0 | Pulse-train input type supporting an open collector | | | | |
| Serial communication type | | ACON-SE-20I-0-0 | Dedicated serial communication type | 64 points | | | |
| Program control type | | ASEL-C-1-20I-NP-2-0 | Programmable type capable of operating up to 2 axes | 1500 points | | | →P345 |

* The ASEL model name is based on a 1-axis specification.

# RCA-RGS4C

ROBO Cylinder, Rod Type with Single Guide, Actuator Diameter ø37mm, 24-V Servo Motor Coupling Specification

■Model Specification Items

**RCA – RGS4C – I – □ – □ – □ – A1 – □ – □**

| Series | Type | Encoder type | Motor type | Lead | Stroke | Applicable controller | Cable length | Options |
|---|---|---|---|---|---|---|---|---|
| | | I: Incremental specification<br>A: Absolute specification | 20: Servo motor 20W<br>30: Servo motor 30W | 12: 12mm<br>6: 6mm<br>3: 3mm | 50:50mm<br>~<br>300:300mm<br>(Set in 50-mm steps) | A1 : ACON<br>ASEL | N : No cable<br>P : 1m<br>S : 3m<br>M : 5m<br>X□□ : Specified length<br>R□□ : Robot cable | Refer to the options price list below. |

* Refer to p. 31 of the front matter for details on the model specification items.

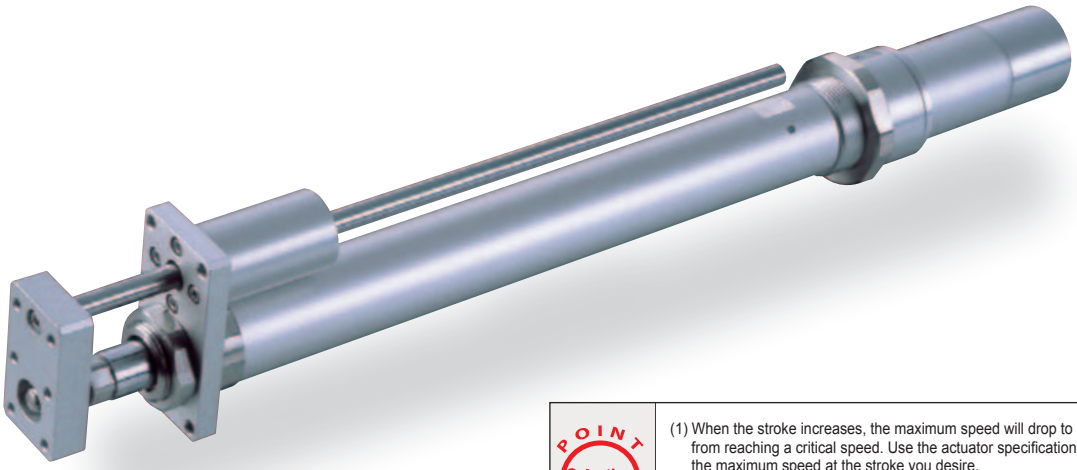

**POINT Selection Points**

(1) When the stroke increases, the maximum speed will drop to prevent the ball screw from reaching a critical speed. Use the actuator specification table below to check the maximum speed at the stroke you desire.
(2) The load capacity is based on operation at an acceleration of 0.3 G (or 0.2 G if the lead is 3). This is the maximum acceleration.
(3) The horizontal load capacity assumes use of an external guide.

## Actuator Specifications

### ■Lead and Load Capacity

| Model | Motor output (W) | Lead (mm) | Maximum load capacity Horizontal (kg) | Maximum load capacity Vertical (kg) | Rated thrust (N) | Stroke (mm) |
|---|---|---|---|---|---|---|
| RCA-RGS4C-①-20-12-②-A1-③-④ | 20 | 12 | 3.0 | 0.5 | 18.9 | 50 ~ 300 (Set in 50-mm steps) |
| RCA-RGS4C-①-20-6-②-A1-③-④ | | 6 | 6.0 | 1.5 | 37.7 | |
| RCA-RGS4C-①-20-3-②-A1-③-④ | | 3 | 12.0 | 3.5 | 75.4 | |
| RCA-RGS4C-①-30-12-②-A1-③-④ | 30 | 12 | 4.0 | 1.0 | 28.3 | |
| RCA-RGS4C-①-30-6-②-A1-③-④ | | 6 | 9.0 | 2.5 | 56.6 | |
| RCA-RGS4C-①-30-3-②-A1-③-④ | | 3 | 18.0 | 6.0 | 113.1 | |

Explanation of numbers ① Encoder type ② Stroke ③ Cable length ④ Options

### ■Stroke and Maximum Speed

| Lead \ Stroke | 50 ~ 300 (Set in 50-mm steps) |
|---|---|
| 12 | 600 |
| 6 | 300 |
| 3 | 150 |

(Unit: mm/s)

## Actuator Specifications

| Item | Description |
|---|---|
| Drive method | Ball screw ø10mm, rolled C10 |
| Positioning repeatability | ±0.02mm |
| Backlash | 0.05mm or less |
| Guide | Single guide, guide rod diameter ø10mm, ball bush type |
| Rod diameter | ø20mm |
| Rod non-rotation accuracy | ±0.05° |
| Ambient operating temperature, humidity | 0~40°C, 85% RH or below (non-condensing) |

## Dimensions

You can download CAD drawings from our website. www.iai-robot.co.jp

2D CAD

*1 Connect the motor/encoder cables. Refer to p. 324 for details on the cables.
*2 The rod moves to the ME during home return. Pay attention to prevent contact between the rod and surrounding parts.
ME: Mechanical end
SE: Stroke end

**[Without brake]**

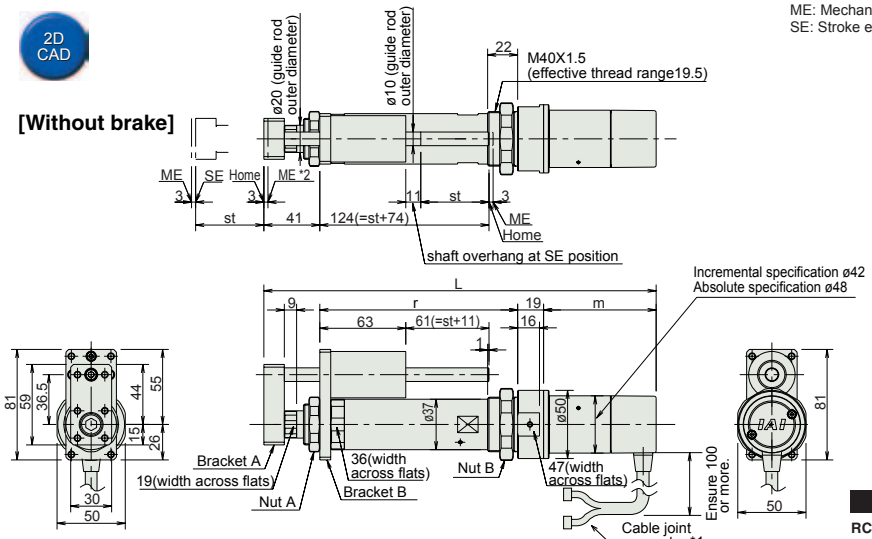


**[With brake]**

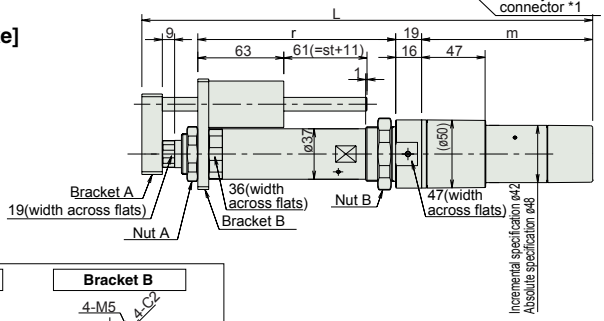


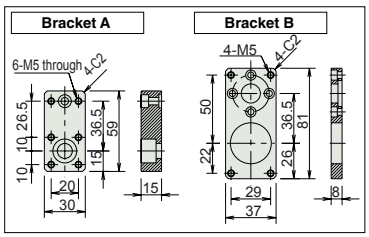


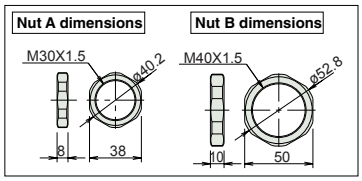


### Dimensions and Weight by Stroke

**RCA-RGS4C (without brake)**

| Stroke | | | 50 | 100 | 150 | 200 | 250 | 300 |
|---|---|---|---|---|---|---|---|---|
| L | 20W | Incremental | 272.5 | 322.5 | 372.5 | 422.5 | 472.5 | 522.5 |
| | | Absolute | 285.5 | 335.5 | 385.5 | 435.5 | 485.5 | 535.5 |
| | 30W | Incremental | 287.5 | 337.5 | 3875 | 437.5 | 487.5 | 537.5 |
| | | Absolute | 300.5 | 350.5 | 400.5 | 450.5 | 500.5 | 550.5 |
| ℓ | | | 145 | 195 | 245 | 295 | 345 | 395 |
| m | 20W | Incremental | 67.5 | | | | | |
| | | Absolute | 80.5 | | | | | |
| | 30W | Incremental | 82.5 | | | | | |
| | | Absolute | 95.5 | | | | | |
| Weight (kg) | | | 1.5 | 1.6 | 1.8 | 2.0 | 2.2 | 2.4 |

**RCA-RGS4C (with brake)**

| Stroke | | | 50 | 100 | 150 | 200 | 250 | 300 |
|---|---|---|---|---|---|---|---|---|
| L | 20W | Incremental | 315.5 | 365.5 | 415.5 | 465.5 | 515.5 | 565.5 |
| | | Absolute | 328.5 | 378.5 | 428.5 | 478.5 | 528.5 | 578.5 |
| | 30W | Incremental | 330.5 | 380.5 | 430.5 | 480.5 | 530.5 | 580.5 |
| | | Absolute | 343.5 | 393.5 | 443.5 | 493.5 | 543.5 | 593.5 |
| ℓ | | | 145 | 195 | 245 | 295 | 345 | 395 |
| m | 20W | Incremental | 110.5 | | | | | |
| | | Absolute | 123.5 | | | | | |
| | 30W | Incremental | 125.5 | | | | | |
| | | Absolute | 138.5 | | | | | |
| Weight (kg) | | | 1.7 | 1.8 | 2.0 | 2.2 | 2.4 | 2.6 |

# Controller

## Applicable Controllers

RCA series actuators can be operated using the following controllers. Choose the type that best suits your specific purpose.

| Name | External view | Model | Features | Maximum number of positioning points | Input power supply | Power-supply capacity | Reference page |
|---|---|---|---|---|---|---|---|
| Positioner type | | ACON-C-20I-NP-2-0<br>ACON-C-30I-NP-2-0 | Supporting up to 512 positioning points | 512 points | DC24V | Rating: 1.7A, Peak: 5A | →P315 |
| Positioner type meeting safety category | | ACON-CG-20I-NP-2-0<br>ACON-CG-30I-NP-2-0 | | | | | |
| Solenoid valve type | | ACON-CY-20I-NP-2-0<br>ACON-CY-30I-NP-2-0 | Same control actions as those applicable to solenoid valves | 3 points | | | |
| Pulse-train input type (differential line driver specification) | | ACON-PL-20I-NP-2-0<br>ACON-PL-30I-NP-2-0 | Pulse-train input type supporting a differential line driver | ( - ) | | | |
| Pulse-train input type (open collector specification) | | ACON-PO-20I-NP-2-0<br>ACON-PO-30I-NP-2-0 | Pulse-train input type supporting an open collector | | | | |
| Serial communication type | | ACON-SE-20I-0-0<br>ACON-SE-30I-0-0 | Dedicated serial communication type | 64 points | | | |
| Program control type | | ASEL-C-1-20①-NP-2-0<br>ASEL-C-1-30①-NP-2-0 | Programmable type capable of operating up to 2 axes | 1500 points | | | →P345 |

* The ASEL model name is based on a 1-axis specification.
* ① indicates the encoder type (I: Incremental / A: Absolute).

# RCA-RGS3D

ROBO Cylinder, Rod Type with Single Guide, Actuator Diameter ø32mm, 24-V Servo Motor Built-In Specification

■Model Specification Items

**RCA – RGS3D – I – 20 – □ – □ – A1 – □ – □**

| Series | Type | Encoder type | Motor type | Lead | Stroke | Applicable controller | Cable length | Options |
|---|---|---|---|---|---|---|---|---|
| | | I: Incremental specification | 20: Servo motor 20W | 10: 10mm<br>5: 5mm<br>2.5: 2.5mm | 50:50mm<br>~<br>200:200mm<br>(Set in 50-mm steps) | A1 : ACON<br>ASEL | N : No cable<br>P : 1m<br>S : 3m<br>M : 5m<br>X□□ : Specified length<br>R□□ : Robot cable | Refer to the options price list below. |

* Refer to p. 31 of the front matter for details on the model specification items.

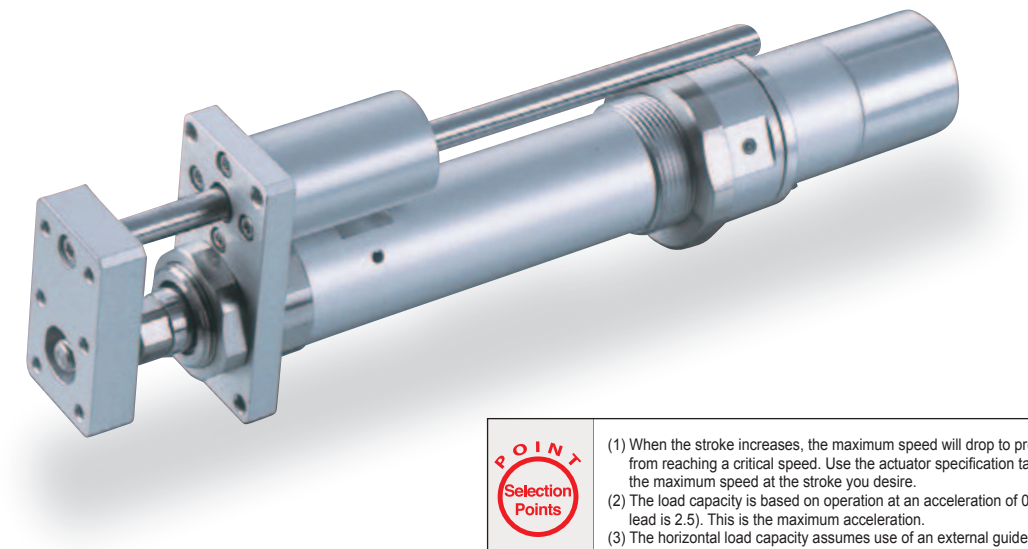

**POINT Selection Points**

(1) When the stroke increases, the maximum speed will drop to prevent the ball screw from reaching a critical speed. Use the actuator specification table below to check the maximum speed at the stroke you desire.
(2) The load capacity is based on operation at an acceleration of 0.3 G (or 0.2 G if the lead is 2.5). This is the maximum acceleration.
(3) The horizontal load capacity assumes use of an external guide.

## Actuator Specifications

### ■ Lead and Load Capacity

| Model | Motor output (W) | Lead (mm) | Maximum load capacity Horizontal (kg) | Maximum load capacity Vertical (kg) | Rated thrust (N) | Stroke (mm) |
|---|---|---|---|---|---|---|
| RCA-RGS3D- I -20-10- ① - A1- ② - ③ | 20 | 10 | 4.0 | 1.2 | 36.2 | 50 ~ 200 (Set in 50-mm steps) |
| RCA-RGS3D- I -20-5- ① - A1- ② - ③ | | 5 | 9.0 | 2.7 | 72.4 | |
| RCA-RGS3D- I -20-2.5- ① - A1- ② - ③ | | 2.5 | 18.0 | 6.2 | 144.8 | |

Explanation of numbers ① Stroke ② Cable length ③ Options

### ■ Stroke and Maximum Speed

| Lead \ Stroke | 50 ~ 200 (Set in 50-mm steps) |
|---|---|
| 10 | 500 |
| 5 | 250 |
| 2.5 | 125 |

(Unit: mm/s)

## Actuator Specifications

| Item | Description |
|---|---|
| Drive method | Ball screw ø8mm, rolled C10 |
| Positioning repeatability | ±0.02mm |
| Backlash | 0.05mm or less |
| Guide | Single guide, guide rod diameter ø8mm, ball bush type |
| Rod diameter | ø16mm |
| Rod non-rotation accuracy | ±0.05° |
| Ambient operating temperature, humidity | 0~40°C, 85% RH or below (non-condensing) |

## Dimensions

You can download CAD drawings from our website. www.iai-robot.co.jp

2D CAD

*1 Connect the motor/encoder cables. Refer to p. 324 for details on the cables.
*2 The rod moves to the ME during home return. Pay attention to prevent contact between the rod and surrounding parts.
ME: Mechanical end
SE: Stroke end

**[Without brake]**

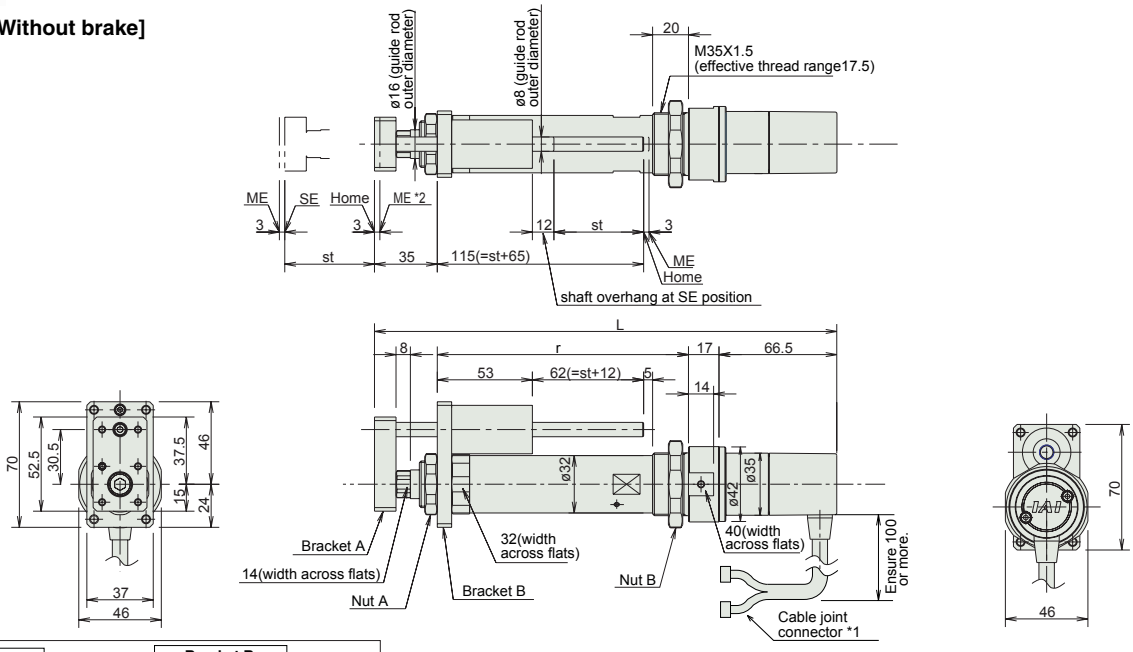


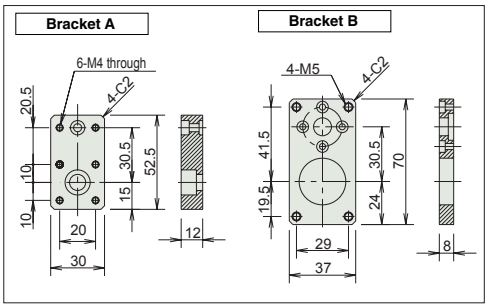


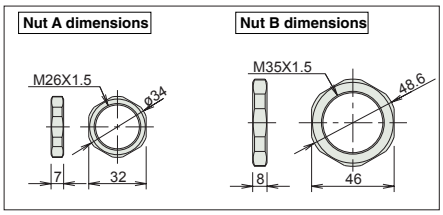


### Dimensions and Weight by Stroke

RCA-RGS3D (without brake)

| Stroke | 50 | 100 | 150 | 200 |
|---|---|---|---|---|
| L | 258.5 | 308.5 | 358.5 | 408.5 |
| ℓ | 140 | 190 | 240 | 290 |
| Weight (kg) | 0.9 | 0.8 | 0.9 | 1.0 |

**The RCA-RGS3D type does not come with brake.**

# Controller

## Applicable Controllers

RCA series actuators can be operated using the following controllers. Choose the type that best suits your specific purpose.

| Name | External view | Model | Features | Maximum number of positioning points | Input power supply | Power-supply capacity | Reference page |
|---|---|---|---|---|---|---|---|
| Positioner type | | ACON-C-20I-NP-2-0 | Supporting up to 512 positioning points | 512 points | DC24V | Rating: 1.7A, Peak: 5A | →P315 |
| Positioner type meeting safety category | | ACON-CG-20I-NP-2-0 | | | | | |
| Solenoid valve type | | ACON-CY-20I-NP-2-0 | Same control actions as those applicable to solenoid valves | 3 points | | | |
| Pulse-train input type (differential line driver specification) | | ACON-PL-20I-NP-2-0 | Pulse-train input type supporting a differential line driver | ( - ) | | | |
| Pulse-train input type (open collector specification) | | ACON-PO-20I-NP-2-0 | Pulse-train input type supporting an open collector | | | | |
| Serial communication type | | ACON-SE-20I-0-0 | Dedicated serial communication type | 64 points | | | |
| Program control type | | ASEL-C-1-20I-NP-2-0 | Programmable type capable of operating up to 2 axes | 1500 points | | | →P345 |

* The ASEL model name is based on a 1-axis specification.

# RCA-RGS4D

ROBO Cylinder, Rod Type with Single Guide, Actuator Diameter ø37mm, 24-V Servo Motor Built-In Specification

■Model Specification Items

**RCA** – **RGS4D** – **I** – □ – □ – □ – **A1** – □ – □

- Series: RCA
- Type: RGS4D
- Encoder type: I: Incremental specification; A: Absolute specification
- Motor type: 20: Servo motor 20W; 30: Servo motor 30W
- Lead: 12: 12mm; 6: 6mm; 3: 3mm
- Stroke: 50:50mm ~ 300:300mm (Set in 50-mm steps)
- Applicable controller: A1: ACON, ASEL
- Cable length: N: No cable; P: 1m; S: 3m; M: 5m; X□□: Specified length; R□□: Robot cable
- Options: Refer to the options price list below.

* Refer to p. 31 of the front matter for details on the model specification items.

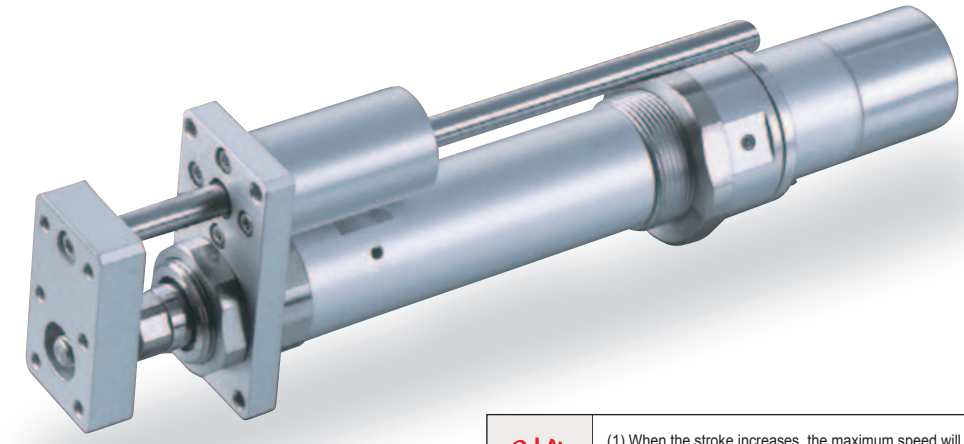

**POINT Selection Points**

(1) When the stroke increases, the maximum speed will drop to prevent the ball screw from reaching a critical speed. Use the actuator specification table below to check the maximum speed at the stroke you desire.
(2) The load capacity is based on operation at an acceleration of 0.3 G (or 0.2 G if the lead is 3). This is the maximum acceleration.
(3) The horizontal load capacity assumes use of an external guide.

## Actuator Specifications

### ■Lead and Load Capacity

| Model | Motor output (W) | Lead (mm) | Maximum load capacity Horizontal (kg) | Maximum load capacity Vertical (kg) | Rated thrust (N) | Stroke (mm) |
|---|---|---|---|---|---|---|
| RCA-RGS4D-①-20-12-②-A1-③-④ | 20 | 12 | 3.0 | 0.5 | 18.9 | 50 ~ 300 (Set in 50-mm steps) |
| RCA-RGS4D-①-20-6-②-A1-③-④ | | 6 | 6.0 | 1.5 | 37.7 | |
| RCA-RGS4D-①-20-3-②-A1-③-④ | | 3 | 12.0 | 3.5 | 75.4 | |
| RCA-RGS4D-①-30-12-②-A1-③-④ | 30 | 12 | 4.0 | 1.0 | 28.3 | |
| RCA-RGS4D-①-30-6-②-A1-③-④ | | 6 | 9.0 | 2.5 | 56.6 | |
| RCA-RGS4D-①-30-3-②-A1-③-④ | | 3 | 18.0 | 6.0 | 113.1 | |

Explanation of numbers ① Encoder type ② Stroke ③ Cable length ④ Options

### ■Stroke and Maximum Speed

| Lead \ Stroke | 50 ~ 300 (Set in 50-mm steps) |
|---|---|
| 12 | 600 |
| 6 | 300 |
| 3 | 150 |

(Unit: mm/s)

## Actuator Specifications

| Item | Description |
|---|---|
| Drive method | Ball screw ø10mm, rolled C10 |
| Positioning repeatability | ±0.02mm |
| Backlash | 0.05mm or less |
| Guide | Single guide, guide rod diameter ø10mm, ball bush type |
| Rod diameter | ø20mm |
| Rod non-rotation accuracy | ±0.05° |
| Ambient operating temperature, humidity | 0~40°C, 85% RH or below (non-condensing) |

## Dimensions

You can download CAD drawings from our website. www.iai-robot.co.jp

2D CAD

**[Without brake]**

*1 Connect the motor/encoder cables. Refer to p. 324 for details on the cables.
*2 The rod moves to the ME during home return. Pay attention to prevent contact between the rod and surrounding parts.
ME: Mechanical end
SE: Stroke end

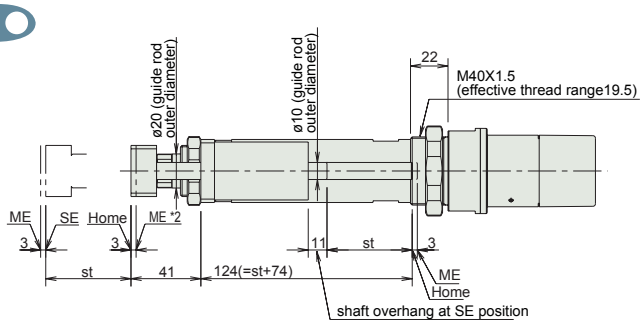


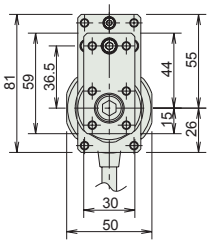


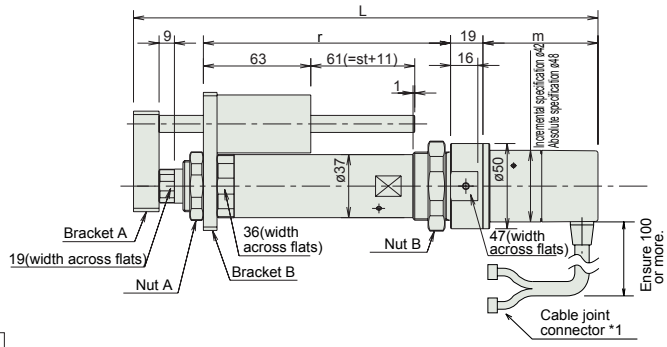


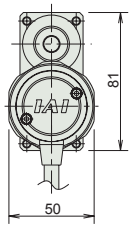


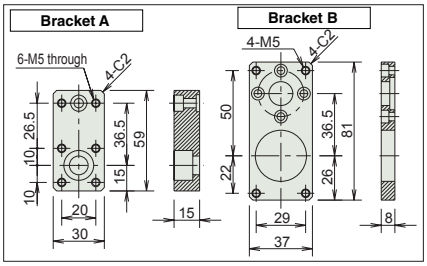


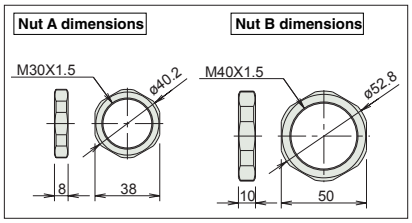


### Dimensions and Weight by Stroke

**RCA-RGS4D (without brake)**

| Stroke | | | 50 | 100 | 150 | 200 | 250 | 300 |
|---|---|---|---|---|---|---|---|---|
| L | 20W | Incremental | 250.5 | 300.5 | 350.5 | 400.5 | 450.5 | 500.5 |
| | | Absolute | 263.5 | 313.5 | 363.5 | 413.5 | 463.5 | 513.5 |
| | 30W | Incremental | 265.5 | 315.5 | 365.5 | 415.5 | 465.5 | 515.5 |
| | | Absolute | 278.5 | 328.5 | 378.5 | 428.5 | 478.5 | 528.5 |
| ℓ | | | 145 | 195 | 245 | 295 | 345 | 395 |
| m | 20W | Incremental | 45.5 | | | | | |
| | | Absolute | 58.5 | | | | | |
| | 30W | Incremental | 60.5 | | | | | |
| | | Absolute | 73.5 | | | | | |
| Weight (kg) | | | 1.3 | 1.5 | 1.7 | 1.9 | 2.1 | 2.3 |

**The RCA-RGS4D type does not come with brake.**

# Controller

## Applicable Controllers

RCA series actuators can be operated using the following controllers. Choose the type that best suits your specific purpose.

| Name | External view | Model | Features | Maximum number of positioning points | Input power supply | Power-supply capacity | Reference page |
|---|---|---|---|---|---|---|---|
| Positioner type | | ACON-C-20I-NP-2-0<br>ACON-C-30I-NP-2-0 | Supporting up to 512 positioning points | 512 points | DC24V | 20W<br>Rating: 1.3A,<br>Peak: 3.7A<br><br>30W<br>Rating: 1.3A,<br>Peak: 4.2A | →P315 |
| Positioner type meeting safety category | | ACON-CG-20I-NP-2-0<br>ACON-CG-30I-NP-2-0 | | | | | |
| Solenoid valve type | | ACON-CY-20I-NP-2-0<br>ACON-CY-30I-NP-2-0 | Same control actions as those applicable to solenoid valves | 3 points | | | |
| Pulse-train input type (differential line driver specification) | | ACON-PL-20I-NP-2-0<br>ACON-PL-30I-NP-2-0 | Pulse-train input type supporting a differential line driver | ( - ) | | | |
| Pulse-train input type (open collector specification) | | ACON-PO-20I-NP-2-0<br>ACON-PO-30I-NP-2-0 | Pulse-train input type supporting an open collector | | | | |
| Serial communication type | | ACON-SE-20-0-0<br>ACON-SE-30I-0-0 | Dedicated serial communication type | 64 points | | | |
| Program control type | | ASEL-C-1-20①-NP-2-0<br>ASEL-C-1-30①-NP-2-0 | Programmable type capable of operating up to 2 axes | 1500 points | | | →P345 |

* The ASEL model name is based on a 1-axis specification.
* ① indicates the encoder type (I: Incremental / A: Absolute).

# RCA-RGD3C

ROBO Cylinder, Rod Type with Double Guide, Actuator Diameter ø32mm, 24-V Servo Motor Coupling Specification

■Model Specification Items

| RCA | RGD3C | I | 20 | □ | □ | A1 | □ | □ |
|---|---|---|---|---|---|---|---|---|
| Series | Type | Encoder type | Motor type | Lead | Stroke | Applicable controller | Cable length | Options |
| | | I: Incremental specification | 20: Servo motor 20W | 10: 10mm<br>5: 5mm<br>2.5: 2.5mm | 50:50mm<br>~<br>200:200mm<br>(Set in 50-mm steps) | A1 : ACON<br>ASEL | N : No cable<br>P : 1m<br>S : 3m<br>M : 5m<br>X□□ : Specified length<br>R□□ : Robot cable | Refer to the options price list below. |

* Refer to p. 31 of the front matter for details on the model specification items.

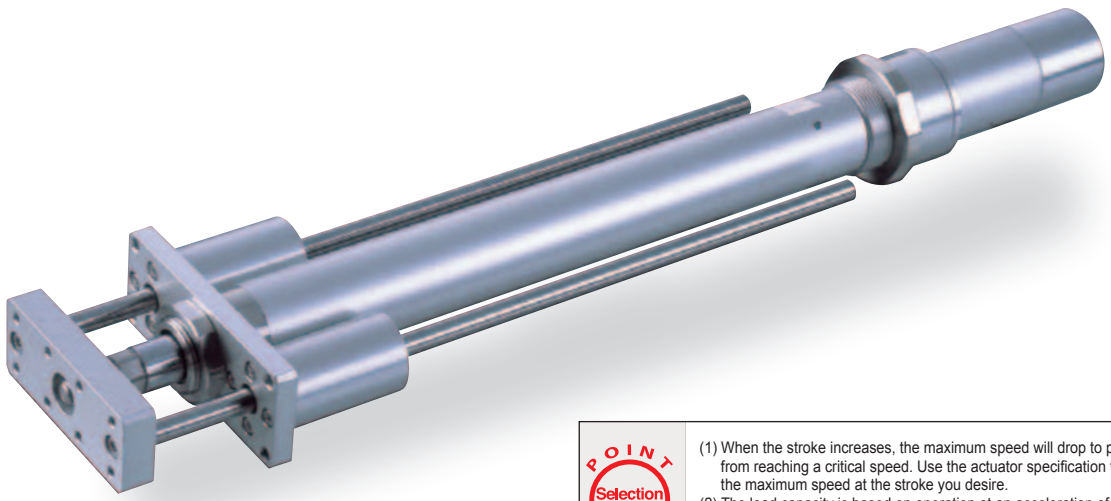

POINT Selection Points

(1) When the stroke increases, the maximum speed will drop to prevent the ball screw from reaching a critical speed. Use the actuator specification table below to check the maximum speed at the stroke you desire.
(2) The load capacity is based on operation at an acceleration of 0.3 G (or 0.2 G if the lead is 2.5). This is the maximum acceleration.
(3) The horizontal load capacity assumes use of an external guide.

## Actuator Specifications

### ■Lead and Load Capacity

| Model | Motor output (W) | Lead (mm) | Maximum load capacity Horizontal (kg) | Maximum load capacity Vertical (kg) | Rated thrust (N) | Stroke (mm) |
|---|---|---|---|---|---|---|
| RCA-RGD3C- I -20-10-① - A1- ② - ③ | 20 | 10 | 4.0 | 1.2 | 36.2 | 50 ~ 200 (Set in 50-mm steps) |
| RCA-RGD3C- I -20-5-① - A1- ② - ③ | | 5 | 9.0 | 2.7 | 72.4 | |
| RCA-RGD3C- I -20-2.5-① - A1- ② - ③ | | 2.5 | 18.0 | 6.2 | 144.8 | |

Explanation of numbers ① Stroke ② Cable length ③ Options

### ■Stroke and Maximum Speed

| Lead \ Stroke | 50 ~ 200 (Set in 50-mm steps) |
|---|---|
| 10 | 500 |
| 5 | 250 |
| 2.5 | 125 |

(Unit: mm/s)

## Actuator Specifications

| Item | Description |
|---|---|
| Drive method | Ball screw ø8mm, rolled C10 |
| Positioning repeatability | ±0.02mm |
| Backlash | 0.05mm or less |
| Guide | Double guide, guide rod diameter ø8mm, ball bush type |
| Rod diameter | ø16mm |
| Rod non-rotation accuracy | ±0.05° |
| Ambient operating temperature, humidity | 0~40°C, 85% RH or below (non-condensing) |

## Dimensions

You can download CAD drawings from our website. www.iai-robot.co.jp

2D CAD

*1 Connect the motor/encoder cables. Refer to p. 324 for details on the cables.
*2 The rod moves to the ME during home return. Pay attention to prevent contact between the rod and surrounding parts.
ME: Mechanical end
SE: Stroke end

**[Without brake]**

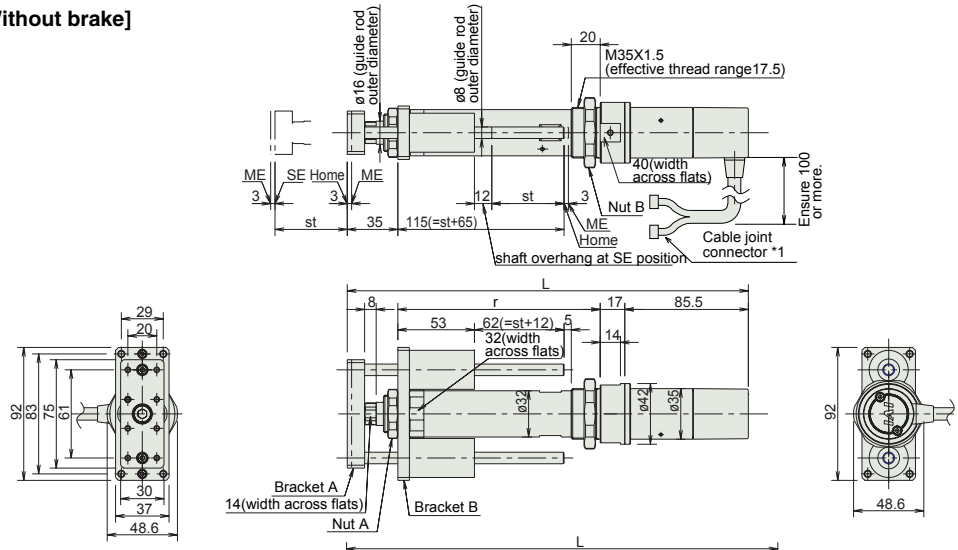


**[With brake]**

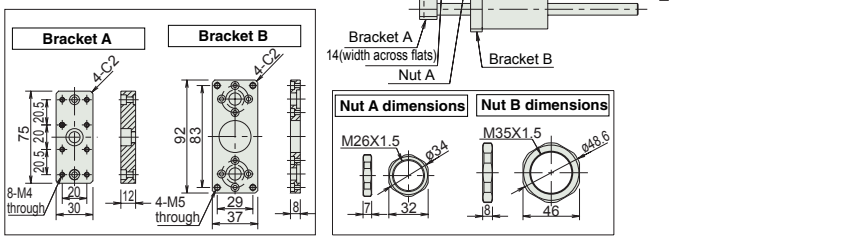





### Dimensions and Weight by Stroke

**RCA-RGD3C (without brake)**

| Stroke | 50 | 100 | 150 | 200 |
|---|---|---|---|---|
| L | 277.5 | 327.5 | 377.5 | 427.5 |
| ℓ | 140 | 190 | 240 | 290 |
| Weight (kg) | 1.1 | 1.2 | 1.4 | 1.5 |

**RCA-RGD3C (with brake)**

| Stroke | 50 | 100 | 150 | 200 |
|---|---|---|---|---|
| L | 316.5 | 366.5 | 416.5 | 466.5 |
| ℓ | 140 | 190 | 240 | 290 |
| Weight (kg) | 1.3 | 1.4 | 1.6 | 1.7 |

# Controller

## Applicable Controllers

RCA series actuators can be operated using the following controllers. Choose the type that best suits your specific purpose.

| Name | External view | Model | Features | Maximum number of positioning points | Input power supply | Power-supply capacity | Reference page |
|---|---|---|---|---|---|---|---|
| Positioner type | | ACON-C-20I-NP-2-0 | Supporting up to 512 positioning points | 512 points | DC24V | Rating: 1.7A, Peak: 5A | →P315 |
| Positioner type meeting safety category | | ACON-CG-20I-NP-2-0 | | | | | |
| Solenoid valve type | | ACON-CY-20I-NP-2-0 | Same control actions as those applicable to solenoid valves | 3 points | | | |
| Pulse-train input type (differential line driver specification) | | ACON-PL-20I-NP-2-0 | Pulse-train input type supporting a differential line driver | ( - ) | | | |
| Pulse-train input type (open collector specification) | | ACON-PO-20I-NP-2-0 | Pulse-train input type supporting an open collector | | | | |
| Serial communication type | | ACON-SE-20I-0-0 | Dedicated serial communication type | 64 points | | | |
| Program control type | | ASEL-C-1-20I-NP-2-0 | Programmable type capable of operating up to 2 axes | 1500 points | | | →P345 |

* The ASEL model name is based on a 1-axis specification.

# RCA-RGD4C

ROBO Cylinder, Rod Type with Double Guide, Actuator Diameter ø37mm, 24-V Servo Motor Coupling Specification

■Model Specification Items

**RCA** – **RGD4C** – **I** – □ – □ – □ – **A1** – □ – □

- Series: RCA
- Type: RGD4C
- Encoder type: I: Incremental specification; A: Absolute specification
- Motor type: 20: Servo motor 20W; 30: Servo motor 30W
- Lead: 12: 12mm; 6: 6mm; 3: 3mm
- Stroke: 50:50mm ~ 300:300mm (Set in 50-mm steps)
- Applicable controller: A1: ACON, ASEL
- Cable length: N: No cable; P: 1m; S: 3m; M: 5m; X□□: Specified length; R□□: Robot cable
- Options: Refer to the options price list below.

* Refer to p. 31 of the front matter for details on the model specification items.

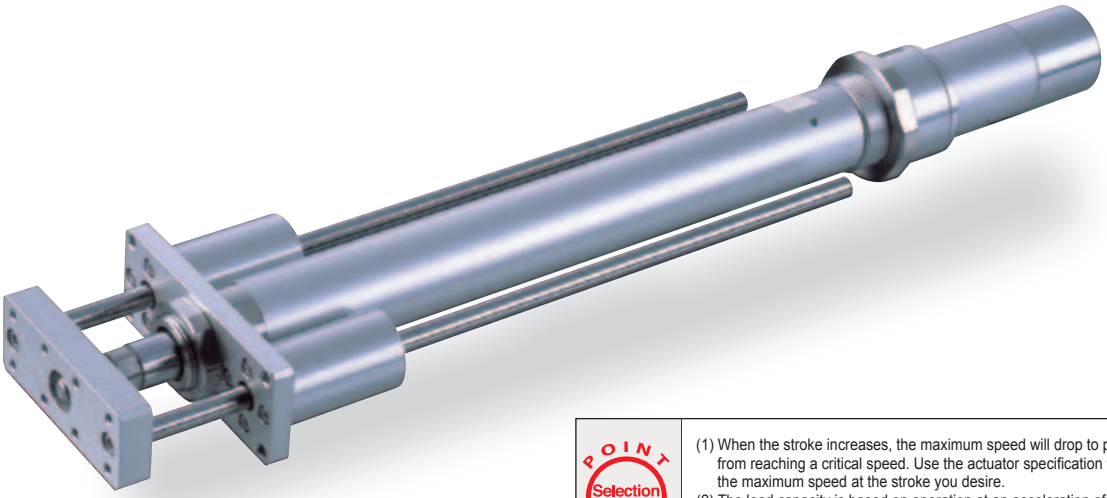

**POINT Selection Points**

(1) When the stroke increases, the maximum speed will drop to prevent the ball screw from reaching a critical speed. Use the actuator specification table below to check the maximum speed at the stroke you desire.
(2) The load capacity is based on operation at an acceleration of 0.3 G (or 0.2 G if the lead is 3). This is the maximum acceleration.
(3) The horizontal load capacity assumes use of an external guide.

## Actuator Specifications

### ■Lead and Load Capacity

| Model | Motor output (W) | Lead (mm) | Maximum load capacity Horizontal (kg) | Maximum load capacity Vertical (kg) | Rated thrust (N) | Stroke (mm) |
|---|---|---|---|---|---|---|
| RCA-RGD4C-①-20-12-②-A1-③-④ | 20 | 12 | 3.0 | 0.5 | 18.9 | 50 ~ 300 (Set in 50-mm steps) |
| RCA-RGD4C-①-20-6-②-A1-③-④ | | 6 | 6.0 | 1.5 | 37.7 | |
| RCA-RGD4C-①-20-3-②-A1-③-④ | | 3 | 12.0 | 3.5 | 75.4 | |
| RCA-RGD4C-①-30-12-②-A1-③-④ | 30 | 12 | 4.0 | 1.0 | 28.3 | |
| RCA-RGD4C-①-30-6-②-A1-③-④ | | 6 | 9.0 | 2.5 | 56.6 | |
| RCA-RGD4C-①-30-3-②-A1-③-④ | | 3 | 18.0 | 6.0 | 113.1 | |

Explanation of numbers ① Encoder type ② Stroke ③ Cable length ④ Options

### ■Stroke and Maximum Speed

| Lead \ Stroke | 50 ~ 300 (Set in 50-mm steps) |
|---|---|
| 12 | 600 |
| 6 | 300 |
| 3 | 150 |

(Unit: mm/s)

## Actuator Specifications

| Item | Description |
|---|---|
| Drive method | Ball screw ø10mm, rolled C10 |
| Positioning repeatability | ±0.02mm |
| Backlash | 0.05mm or less |
| Guide | Double guide, guide rod diameter ø10mm, ball bush type |
| Rod diameter | ø20mm |
| Rod non-rotation accuracy | ±0.05° |
| Ambient operating temperature, humidity | 0~40°C, 85% RH or below (non-condensing) |

## Dimensions

You can download CAD drawings from our website. www.iai-robot.co.jp

2D CAD

*1 Connect the motor/encoder cables. Refer to p. 324 for details on the cables.
*2 The rod moves to the ME during home return. Pay attention to prevent contact between the rod and surrounding parts.
ME: Mechanical end
SE: Stroke end

**[Without brake]**

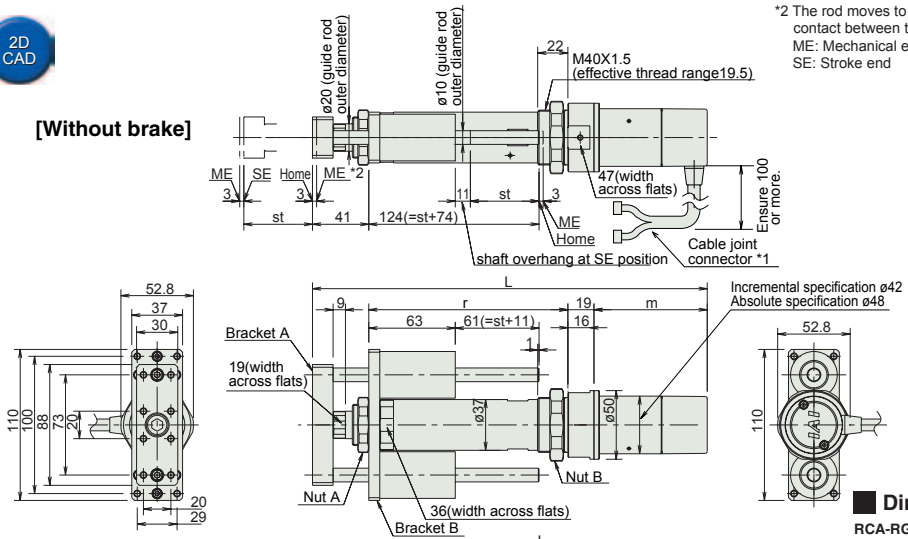


**[With brake]**

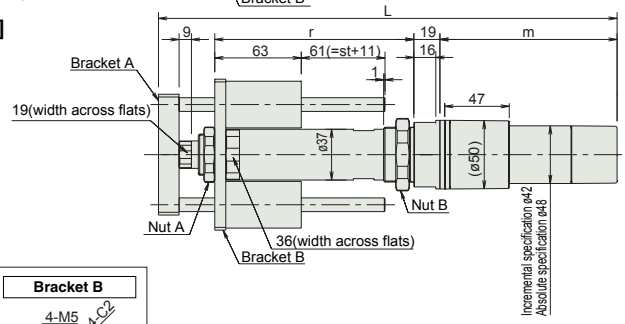


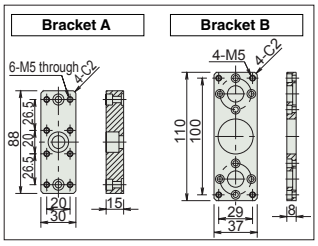


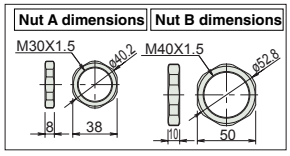


### Dimensions and Weight by Stroke

**RCA-RGD4C (without brake)**

| Stroke | | | 50 | 100 | 150 | 200 | 250 | 300 |
|---|---|---|---|---|---|---|---|---|
| L | 20W | Incremental | 272.5 | 322.5 | 372.5 | 422.5 | 472.5 | 522.5 |
| | | Absolute | 285.5 | 335.5 | 385.5 | 435.5 | 485.5 | 535.5 |
| | 30W | Incremental | 287.5 | 337.5 | 387.5 | 437.5 | 487.5 | 537.5 |
| | | Absolute | 300.5 | 350.5 | 400.5 | 450.5 | 500.5 | 550.5 |
| ℓ | | | 137 | 187 | 237 | 287 | 337 | 487 |
| m | 20W | Incremental | 67.5 | | | | | |
| | | Absolute | 80.5 | | | | | |
| | 30W | Incremental | 82.5 | | | | | |
| | | Absolute | 95.5 | | | | | |
| Weight (kg) | | | 1.8 | 2.0 | 2.2 | 2.4 | 2.6 | 2.8 |

**RCA-RGD4C (with brake)**

| Stroke | | | 50 | 100 | 150 | 200 | 250 | 300 |
|---|---|---|---|---|---|---|---|---|
| L | 20W | Incremental | 315.5 | 365.5 | 415.5 | 465.5 | 515.5 | 565.5 |
| | | Absolute | 328.5 | 378.5 | 428.5 | 478.5 | 528.5 | 578.5 |
| | 30W | Incremental | 330.5 | 380.5 | 430.5 | 4807.5 | 530.5 | 580.5 |
| | | Absolute | 343.5 | 393.5 | 443.5 | 493.5 | 543.5 | 593.5 |
| ℓ | | | 145 | 195 | 245 | 295 | 345 | 395 |
| m | 20W | Incremental | 110.5 | | | | | |
| | | Absolute | 123.5 | | | | | |
| | 30W | Incremental | 125.5 | | | | | |
| | | Absolute | 138.5 | | | | | |
| Weight (kg) | | | 2.0 | 2.2 | 2.4 | 2.6 | 2.8 | 3.0 |

# Controller

## Applicable Controllers

RCA series actuators can be operated using the following controllers. Choose the type that best suits your specific purpose.

| Name | External view | Model | Features | Maximum number of positioning points | Input power supply | Power-supply capacity | Reference page |
|---|---|---|---|---|---|---|---|
| Positioner type | | ACON-C-20I-NP-2-0<br>ACON-C-30I-NP-2-0 | Supporting up to 512 positioning points | 512 points | DC24V | 20W<br>Rating: 1.3A,<br>Peak: 3.7A<br><br>30W<br>Rating: 1.3A,<br>Peak: 4.2A | →P315 |
| Positioner type meeting safety category | | ACON-CG-20I-NP-2-0<br>ACON-CG-30I-NP-2-0 | | | | | |
| Solenoid valve type | | ACON-CY-20I-NP-2-0<br>ACON-CY-30I-NP-2-0 | Same control actions as those applicable to solenoid valves | 3 points | | | |
| Pulse-train input type (differential line driver specification) | | ACON-PL-20I-NP-2-0<br>ACON-PL-30I-NP-2-0 | Pulse-train input type supporting a differential line driver | ( - ) | | | |
| Pulse-train input type (open collector specification) | | ACON-PO-20I-NP-2-0<br>ACON-PO-30I-NP-2-0 | Pulse-train input type supporting an open collector | | | | |
| Serial communication type | | ACON-SE-20I-0-0<br>ACON-SE-30I-0-0 | Dedicated serial communication type | 64 points | | | |
| Program control type | | ASEL-C-1-20①-NP-2-0<br>ASEL-C-1-30①-NP-2-0 | Programmable type capable of operating up to 2 axes | 1500 points | | | →P345 |

* The ASEL model name is based on a 1-axis specification.
* ① indicates the encoder type (I: Incremental / A: Absolute).

# RCA-RGD3D

ROBO Cylinder, Rod Type with Double Guide, Actuator Diameter ø32mm, 24-V Servo Motor Built-In Specification

■Model Specification Items

**RCA** – **RGD3C** – **I** – **20** – ☐ – ☐ – **A1** – ☐ – ☐

| Series | Type | Encoder type | Motor type | Lead | Stroke | Applicable controller | Cable length | Options |
|---|---|---|---|---|---|---|---|---|
| | | I: Incremental specification | 20: Servo motor 20W | 10: 10mm<br>5: 5mm<br>2.5: 2.5mm | 50:50mm<br>~<br>200:200mm<br>(Set in 50-mm steps) | A1 : ACON<br>ASEL | N : No cable<br>P : 1m<br>S : 3m<br>M : 5m<br>X□□ : Specified length<br>R□□ : Robot cable | Refer to the options price list below. |

* Refer to p. 31 of the front matter for details on the model specification items.

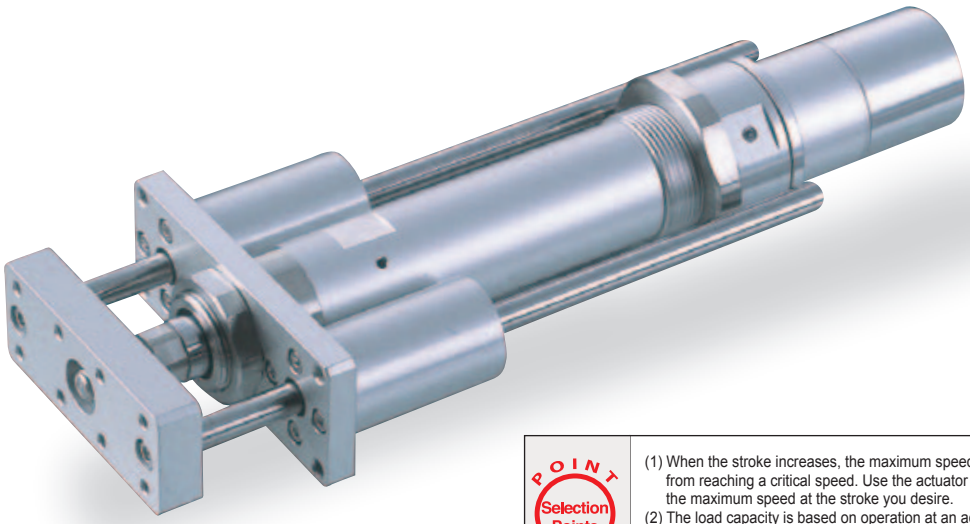

**POINT Selection Points**

(1) When the stroke increases, the maximum speed will drop to prevent the ball screw from reaching a critical speed. Use the actuator specification table below to check the maximum speed at the stroke you desire.
(2) The load capacity is based on operation at an acceleration of 0.3 G (or 0.2 G if the lead is 2.5). This is the maximum acceleration.
(3) The horizontal load capacity assumes use of an external guide.

## Actuator Specifications

### ■Lead and Load Capacity

| Model | Motor output (W) | Lead (mm) | Maximum load capacity Horizontal (kg) | Maximum load capacity Vertical (kg) | Rated thrust (N) | Stroke (mm) |
|---|---|---|---|---|---|---|
| RCA-RGD3D- I -20-10-① - A1- ② - ③ | 20 | 10 | 4.0 | 1.2 | 36.2 | 50 ~ 200 (Set in 50-mm steps) |
| RCA-RGD3D- I -20-5-① - A1- ② - ③ | | 5 | 9.0 | 2.7 | 72.4 | |
| RCA-RGD3D- I -20-2.5-① - A1- ② - ③ | | 2.5 | 18.0 | 6.2 | 144.8 | |

Explanation of numbers ① Stroke ② Cable length ③ Options

### ■Stroke and Maximum Speed

| Lead \ Stroke | 50 ~ 200 (Set in 50-mm steps) |
|---|---|
| 10 | 500 |
| 5 | 250 |
| 2.5 | 125 |

(Unit: mm/s)

## Actuator Specifications

| Item | Description |
|---|---|
| Drive method | Ball screw ø8mm, rolled C10 |
| Positioning repeatability | ±0.02mm |
| Backlash | 0.05mm or less |
| Guide | Double guide, guide rod diameter ø8mm, ball bush type |
| Rod diameter | ø16mm |
| Rod non-rotation accuracy | ±0.05° |
| Ambient operating temperature, humidity | 0~40°C, 85% RH or below (non-condensing) |

## Dimensions

You can download CAD drawings from our website. www.iai-robot.co.jp

2D CAD

*1 Connect the motor/encoder cables. Refer to p. 324 for details on the cables.
*2 The rod moves to the ME during home return. Pay attention to prevent contact between the rod and surrounding parts.
ME: Mechanical end
SE: Stroke end

**[Without brake]**

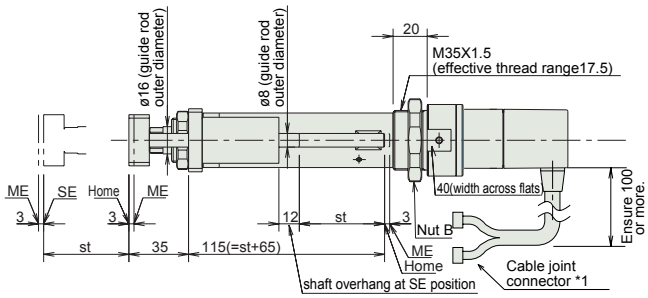


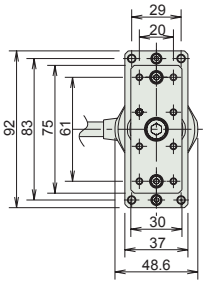


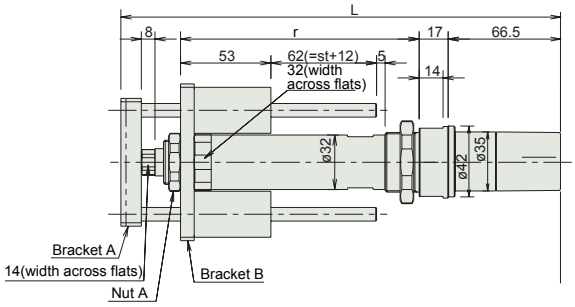


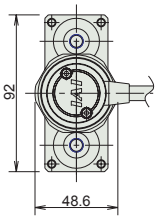


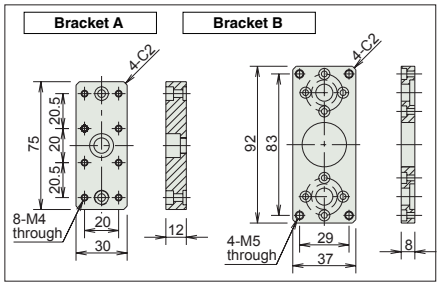


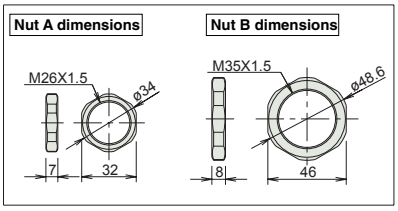


### Dimensions and Weight by Stroke

RCA-RGD3D (without brake)

| Stroke | 50 | 100 | 150 | 200 |
|---|---|---|---|---|
| L | 258.5 | 308.5 | 358.5 | 408.5 |
| ℓ | 140 | 190 | 240 | 290 |
| Weight (kg) | 1.1 | 1.2 | 1.4 | 1.5 |

**The RCA-RGD3D type does not come with brake.**

# Controller

## Applicable Controllers

RCA series actuators can be operated using the following controllers. Choose the type that best suits your specific purpose.

| Name | External view | Model | Features | Maximum number of positioning points | Input power supply | Power-supply capacity | Reference page |
|---|---|---|---|---|---|---|---|
| Positioner type | | ACON-C-20I-NP-2-0 | Supporting up to 512 positioning points | 512 points | DC24V | Rating: 1.7A, Peak: 5A | →P315 |
| Positioner type meeting safety category | | ACON-CG-20I-NP-2-0 | | | | | |
| Solenoid valve type | | ACON-CY-20I-NP-2-0 | Same control actions as those applicable to solenoid valves | 3 points | | | |
| Pulse-train input type (differential line driver specification) | | ACON-PL-20I-NP-2-0 | Pulse-train input type supporting a differential line driver | ( - ) | | | |
| Pulse-train input type (open collector specification) | | ACON-PO-20I-NP-2-0 | Pulse-train input type supporting an open collector | | | | |
| Serial communication type | | ACON-SE-20I-0-0 | Dedicated serial communication type | 64 points | | | |
| Program control type | | ASEL-C-1-20I-NP-2-0 | Programmable type capable of operating up to 2 axes | 1500 points | | | →P345 |

* The ASEL model name is based on a 1-axis specification.

# RCA-RGD4D

ROBO Cylinder, Rod Type with Double Guide, Actuator Diameter ø37mm, 24-V Servo Motor Built-In Specification

■Model Specification Items

**RCA – RGD4C – I – □ – □ – □ – A1 – □ – □**

| Series | Type | Encoder type | Motor type | Lead | Stroke | Applicable controller | Cable length | Options |
|---|---|---|---|---|---|---|---|---|
| | | I: Incremental specification<br>A: Absolute specification | 20: Servo motor 20W<br>30: Servo motor 30W | 12: 12mm<br>6: 6mm<br>3: 3mm | 50:50mm<br>~<br>200:200mm<br>(Set in 50-mm steps) | A1 : ACON<br>ASEL | N : No cable<br>P : 1m<br>S : 3m<br>M : 5m<br>X□□ : Specified length<br>R□□ : Robot cable | Refer to the options price list below. |

* Refer to p. 31 of the front matter for details on the model specification items.

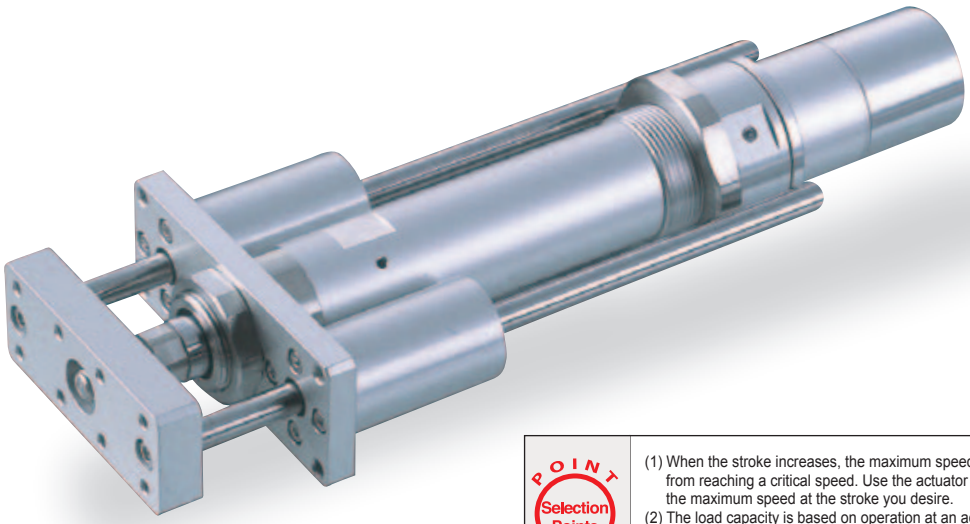

**POINT Selection Points**

(1) When the stroke increases, the maximum speed will drop to prevent the ball screw from reaching a critical speed. Use the actuator specification table below to check the maximum speed at the stroke you desire.
(2) The load capacity is based on operation at an acceleration of 0.3 G (or 0.2 G if the lead is 3). This is the maximum acceleration.
(3) The horizontal load capacity assumes use of an external guide.

## Actuator Specifications

### ■Lead and Load Capacity

| Model | Motor output (W) | Lead (mm) | Maximum load capacity Horizontal (kg) | Maximum load capacity Vertical (kg) | Rated thrust (N) | Stroke (mm) |
|---|---|---|---|---|---|---|
| RCA-RGD4D-①-20-12-②-A1-③-④ | 20 | 12 | 3.0 | 0.5 | 18.9 | 50 ~ 300 (Set in 50-mm steps) |
| RCA-RGD4D-①-20-6-②-A1-③-④ | | 6 | 6.0 | 1.5 | 37.7 | |
| RCA-RGD4D-①-20-3-②-A1-③-④ | | 3 | 12.0 | 3.5 | 75.4 | |
| RCA-RGD4D-①-30-12-②-A1-③-④ | 30 | 12 | 4.0 | 1.0 | 28.3 | |
| RCA-RGD4D-①-30-6-②-A1-③-④ | | 6 | 9.0 | 2.5 | 56.6 | |
| RCA-RGD4D-①-30-3-②-A1-③-④ | | 3 | 18.0 | 6.0 | 113.1 | |

Explanation of numbers ① Encoder type ② Stroke ③ Cable length ④ Options

### ■Stroke and Maximum Speed

| Lead \ Stroke | 50 ~ 300 (Set in 50-mm steps) |
|---|---|
| 12 | 600 |
| 6 | 300 |
| 3 | 150 |

(Unit: mm/s)

## Actuator Specifications

| Item | Description |
|---|---|
| Drive method | Ball screw ø10mm, rolled C10 |
| Positioning repeatability | ±0.02mm |
| Backlash | 0.05mm or less |
| Guide | Double guide, guide rod diameter ø10mm, ball bush type |
| Rod diameter | ø20mm |
| Rod non-rotation accuracy | ±0.05° |
| Ambient operating temperature, humidity | 0~40°C, 85% RH or below (non-condensing) |

## Dimensions

You can download CAD drawings from our website. www.iai-robot.co.jp

2D CAD

*1 Connect the motor/encoder cables. Refer to p. 324 for details on the cables.
*2 The rod moves to the ME during home return. Pay attention to prevent contact between the rod and surrounding parts.
ME: Mechanical end
SE: Stroke end

**[Without brake]**

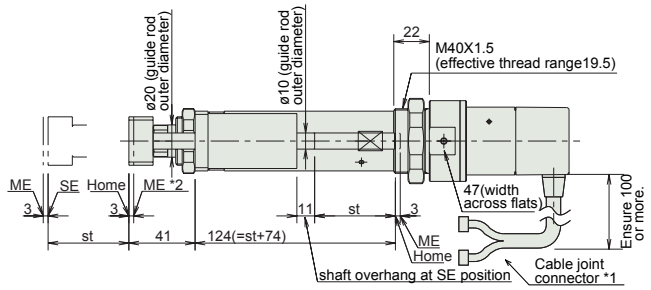


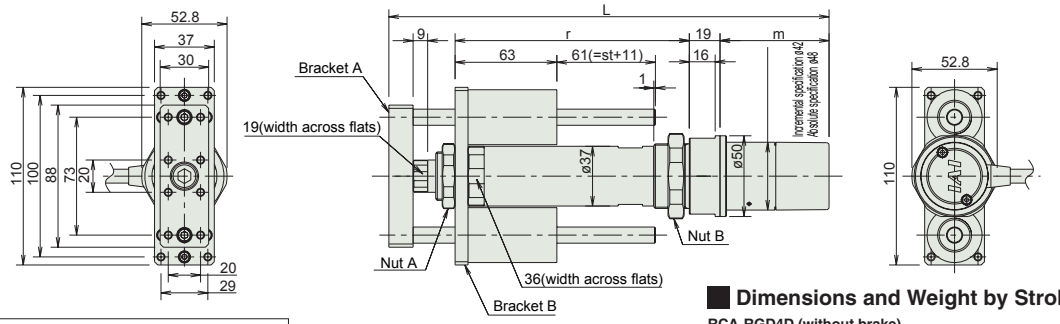


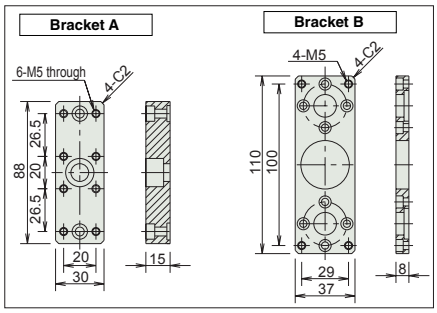


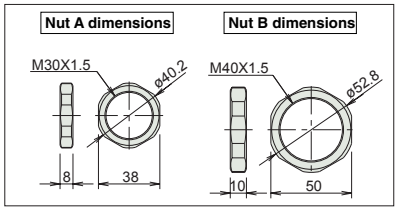


### Dimensions and Weight by Stroke

**RCA-RGD4D (without brake)**

| Stroke | | | 50 | 100 | 150 | 200 | 250 | 300 |
|---|---|---|---|---|---|---|---|---|
| L | 20W | Incremental | 250.5 | 300.5 | 350.5 | 400.5 | 450.5 | 500.5 |
| | | Absolute | 263.5 | 313.5 | 363.5 | 413.5 | 463.5 | 513.5 |
| | 30W | Incremental | 265.5 | 315.5 | 365.5 | 415.5 | 465.5 | 515.5 |
| | | Absolute | 278.5 | 328.5 | 378.5 | 428.5 | 478.5 | 528.5 |
| ℓ | | | 145 | 195 | 245 | 295 | 345 | 395 |
| m | 20W | Incremental | 45.5 | | | | | |
| | | Absolute | 58.5 | | | | | |
| | 30W | Incremental | 60.5 | | | | | |
| | | Absolute | 73.5 | | | | | |
| Weight (kg) | | | 1.8 | 1.8 | 2.1 | 2.3 | 2.5 | 2.7 |

**The RCA-RGD4D type does not come with brake.**

# Controller

## Applicable Controllers

RCA series actuators can be operated using the following controllers. Choose the type that best suits your specific purpose.

| Name | External view | Model | Features | Maximum number of positioning points | Input power supply | Power-supply capacity | Reference page |
|---|---|---|---|---|---|---|---|
| Positioner type | | ACON-C-20I-NP-2-0<br>ACON-C-30I-NP-2-0 | Supporting up to 512 positioning points | 512 points | DC24V | 20W<br>Rating: 1.3A,<br>Peak: 3.7A<br><br>30W<br>Rating: 1.3A,<br>Peak: 4.2A | →P315 |
| Positioner type meeting safety category | | ACON-CG-20I-NP-2-0<br>ACON-CG-30I-NP-2-0 | | | | | |
| Solenoid valve type | | ACON-CY-20I-NP-2-0<br>ACON-CY-30I-NP-2-0 | Same control actions as those applicable to solenoid valves | 3 points | | | |
| Pulse-train input type (differential line driver specification) | | ACON-PL-20I-NP-2-0<br>ACON-PL-30I-NP-2-0 | Pulse-train input type supporting a differential line driver | ( - ) | | | |
| Pulse-train input type (open collector specification) | | ACON-PO-20I-NP-2-0<br>ACON-PO-30I-NP-2-0 | Pulse-train input type supporting an open collector | | | | |
| Serial communication type | | ACON-SE-20I-0-0<br>ACON-SE-30I-0-0 | Dedicated serial communication type | 64 points | | | |
| Program control type | | ASEL-C-1-20①-NP-2-0<br>ASEL-C-1-30①-NP-2-0 | Programmable type capable of operating up to 2 axes | 1500 points | | | →P345 |

* The ASEL model name is based on a 1-axis specification.
* ① indicates the encoder type (I: Incremental / A: Absolute).

ROBO CYLINDER

# Arm Type

# RCA

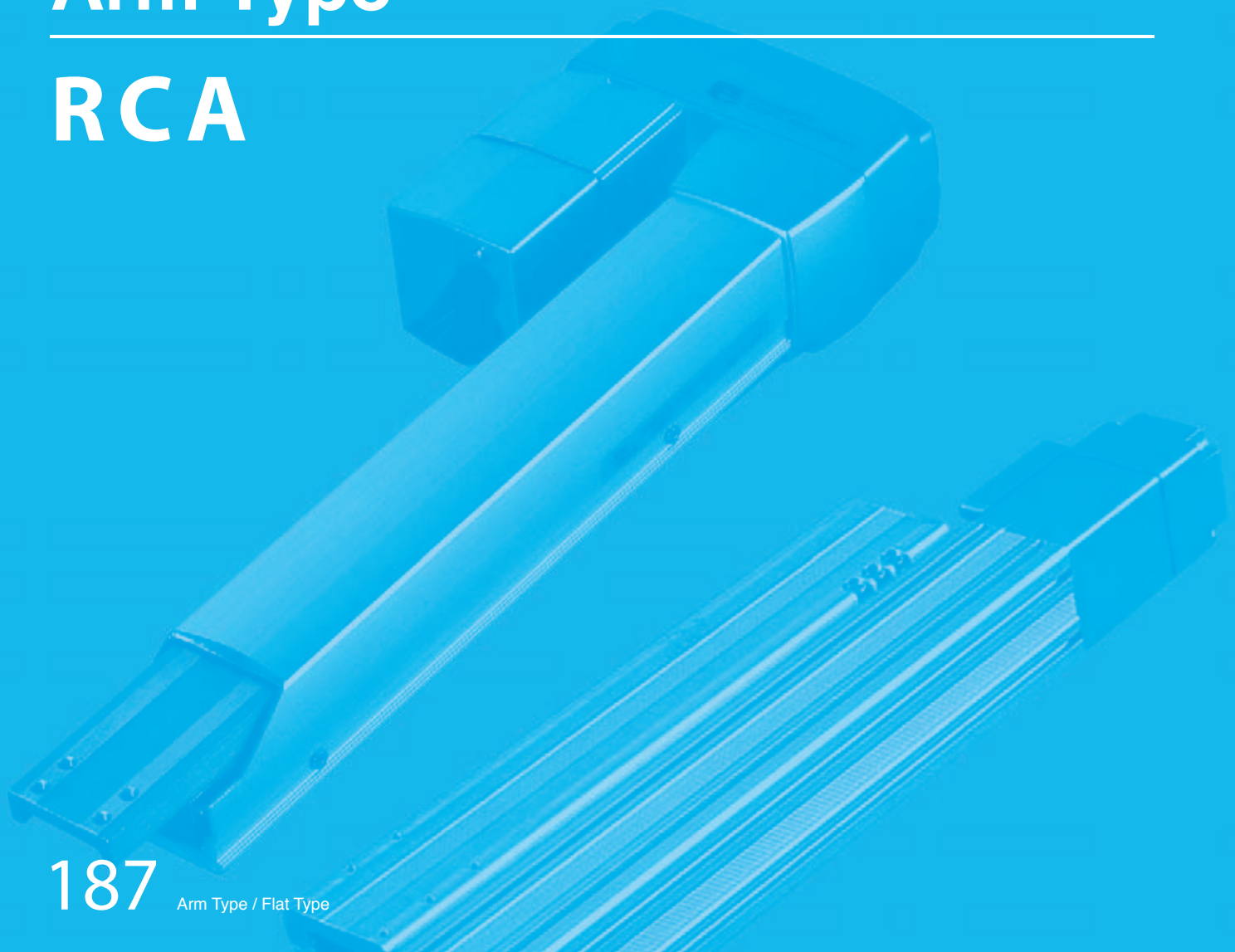

# RCA-A4R

ROBO Cylinder, Arm Type, Actuator Width 40mm, 24-V Servo Motor
Motor Reversing Specification

■Model Specification Items

**RCA** — **A4R** — □ — **20** — □ — □ — **A1** — □ — □

- Series: RCA
- Type: A4R
- Encoder type: I: Incremental specification; A: Absolute specification
- Motor type: 20: Servo motor 20W
- Lead: 10: 10mm; 5: 5mm
- Stroke: 50:50mm ~ 200:200mm (Set in 50-mm steps)
- Applicable controller: A1 : ACON, ASEL
- Cable length: N : No cable; P : 1m; S : 3m; M : 5m; X□□ : Specified length; R□□ : Robot cable
- Options: B: Brake (standard); NM: Reversed-home specification; MR: Motor reversing on right; ML: Motor reversing on left

* Refer to p. 31 of the front matter for details on the model specification items.

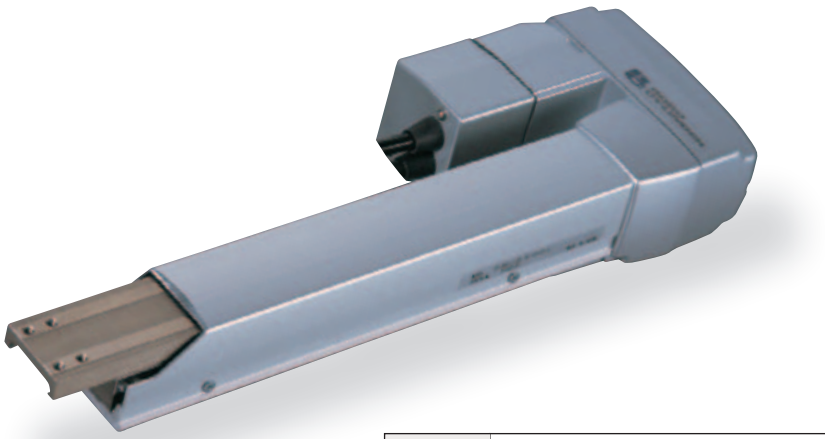

**POINT Selection Points**

(1) When the stroke increases, the maximum speed will drop to prevent the ball screw from reaching a critical speed. Use the actuator specification table below to check the maximum speed at the stroke you desire.
(2) The load capacity is based on operation at an acceleration of 0.2 G. This is the maximum acceleration.

## Actuator Specifications

### ■ Lead and Load Capacity

| Model | Motor output (W) | Lead (mm) | Maximum load capacity Horizontal (kg) | Maximum load capacity Vertical (kg) | Rated thrust (N) | Stroke (mm) |
|---|---|---|---|---|---|---|
| RCA-A4R-①-20-10-②-A1-③-④ | 20 | 10 | – | 2.5 | 39.2 | 50 ~ 200 (Set in 50-mm steps) |
| RCA-A4R-①-20-5-②-A1-③-④ | | 5 | – | 4.5 | 78.4 | |

Explanation of numbers ① Encoder type ② Stroke ③ Cable length ④ Options

### ■ Stroke and Maximum Speed

| Lead \ Stroke | 50 ~ 200 (Set in 50-mm steps) |
|---|---|
| 10 | 330 |
| 5 | 165 |

(Unit: mm/s)

## Actuator Specifications

| Item | Description |
|---|---|
| Drive method | Ball screw ø8mm, rolled C10 (Ball screw speed reduced to half by means of timing belt) |
| Positioning repeatability | ±0.02mm |
| Backlash | 0.1mm or less |
| Base | Material: Aluminum with white alumite treatment |
| Allowable load moment | Ma : 2.7N • m Mb : 3.1N • m Mc : 2.9N • m |
| Ambient operating temperature, humidity | 0~40°C, 85% RH or below (non-condensing) |

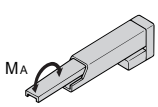


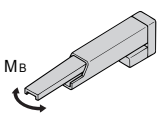


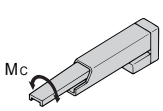

## Dimensions

You can download CAD drawings from our website. www.iai-robot.co.jp

2D CAD

*1 Connect the motor/encoder cables. Refer to p. 324 for details on the cables.
*2 The rod moves to the ME during home return. Pay attention to prevent contact between the rod and surrounding parts.
ME: Mechanical end SE: Stroke end

### Standard motor reversing specification (Option code: Blank)

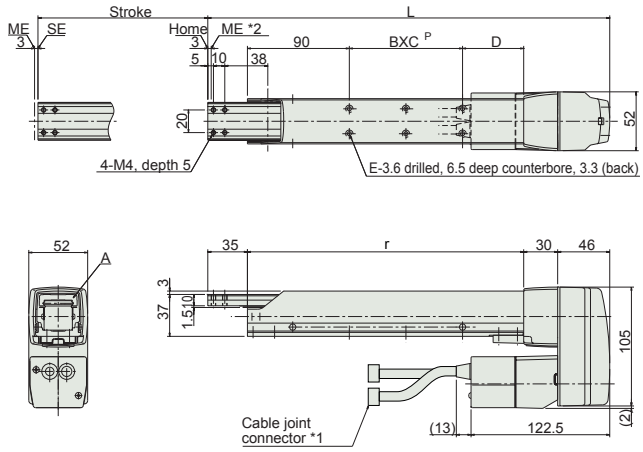


### Motor reversing on right (Option code: MR)

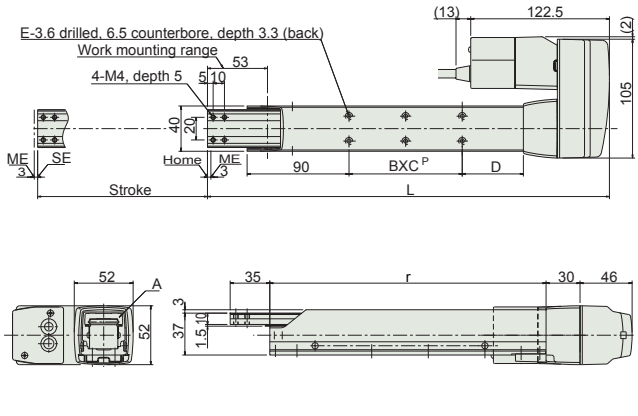


### Motor reversing on left (Option code: ML)

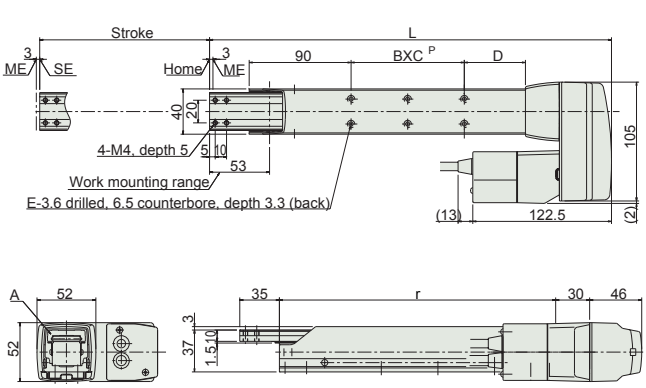


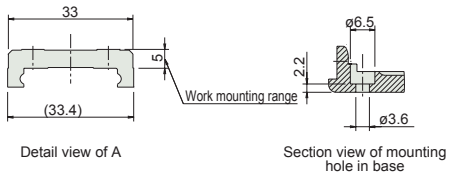


### Dimensions and Weight by Stroke

| Stroke | 50 | 100 | 150 | 200 |
|---|---|---|---|---|
| L | 255 | 305 | 355 | 405 |
| ℓ | 144 | 194 | 244 | 294 |
| BxC P | 1x19 | 1x50 | 2x50 | 2x50 |
| D | 35 | 54 | 54 | 104 |
| E | 4 | 4 | 6 | 6 |
| Weight (kg) | 1.7 | 1.8 | 2.0 | 2.1 |

# Controller

## Applicable Controllers

RCA series actuators can be operated using the following controllers. Choose the type that best suits your specific purpose.

| Name | External view | Model | Features | Maximum number of positioning points | Input power supply | Power-supply capacity | Reference page |
|---|---|---|---|---|---|---|---|
| Positioner type | | ACON-C-20I-NP-2-0 | Supporting up to 512 positioning points | 512 points | DC24V | Rating: 1.3A Peak: 3.7A | →P315 |
| Positioner type meeting safety category | | ACON-CG-20I-NP-2-0 | | | | | |
| Solenoid valve type | | ACON-CY-20I-NP-2-0 | Same control actions as those applicable to solenoid valves | 3 points | | | |
| Pulse-train input type (differential line driver specification) | | ACON-PL-20I-NP-2-0 | Pulse-train input type supporting a differential line driver | ( - ) | | | |
| Pulse-train input type (open collector specification) | | ACON-PO-20I-NP-2-0 | Pulse-train input type supporting an open collector | | | | |
| Serial communication type | | ACON-SE-20I-0-0 | Dedicated serial communication type | 64 points | | | |
| Program control type | | ASEL-C-1-20①-NP-2-0 | Programmable type capable of operating up to 2 axes | 1500 points | | | →P345 |

* The ASEL model name is based on a 1-axis specification.
*① indicates the encoder type (I: Incremental / A: Absolute).

# RCA-A5R

ROBO Cylinder, Arm Type, Actuator Width 52mm, 24-V Servo Motor
Motor Reversing Specification

■Model Specification Items

**RCA** — **A5R** — [ ] — **20** — [ ] — [ ] — **A1** — [ ] — [ ]

- Series: RCA
- Type: A5R
- Encoder type: I: Incremental specification; A: Absolute specification
- Motor type: 20: Servo motor 20W
- Lead: 12: 12mm; 6: 6mm
- Stroke: 50:50mm ~ 200:200mm (Set in 50-mm steps)
- Applicable controller: A1 : ACON ASEL
- Cable length: N : No cable; P : 1m; S : 3m; M : 5m; X□□ : Specified length; R□□ : Robot cable
- Options: B: Brake (standard); NM: Reversed-home specification; MR: Motor reversing on right; ML: Motor reversing on left

* Refer to p. 31 of the front matter for details on the model specification items.

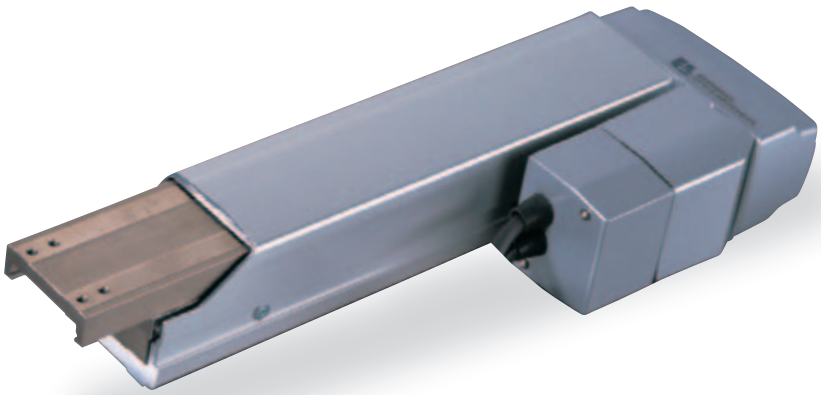

**POINT Selection Points**

(1) When the stroke increases, the maximum speed will drop to prevent the ball screw from reaching a critical speed. Use the actuator specification table below to check the maximum speed at the stroke you desire.
(2) The load capacity is based on operation at an acceleration of 0.2 G. This is the maximum acceleration.

## Actuator Specifications

### ■ Lead and Load Capacity

| Model | Motor output (W) | Lead (mm) | Maximum load capacity Horizontal (kg) | Maximum load capacity Vertical (kg) | Rated thrust (N) | Stroke (mm) |
|---|---|---|---|---|---|---|
| RCA-A5R-①-20-12-②-A1-③-④ | 20 | 12 | – | 2 | 33.3 | 50 ~ 200 (Set in 50-mm steps) |
| RCA-A5R-①-20-6-②-A1-③-④ | | 6 | – | 4 | 65.7 | |

Explanation of numbers ① Encoder type ② Stroke ③ Cable length ④ Options

### ■ Stroke and Maximum Speed

| Lead \ Stroke | 50 ~ 200 (Set in 50-mm steps) |
|---|---|
| 12 | 400 |
| 6 | 200 |

(Unit: mm/s)

## Actuator Specifications

| Item | Description |
|---|---|
| Drive method | Ball screw ø8mm, rolled C10 (Ball screw speed reduced to half by means of timing belt) |
| Positioning repeatability | ±0.02mm |
| Backlash | 0.1mm or less |
| Base | Material: Aluminum with white alumite treatment |
| Allowable load moment | Ma : 4.5N • m Mb : 5.4N • m Mc : 4.1N • m |
| Ambient operating temperature, humidity | 0~40°C, 85% RH or below (non-condensing) |

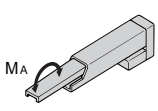


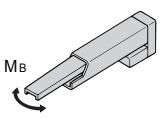


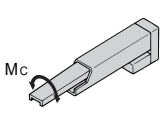

## Dimensions

You can download CAD drawings from our website. www.iai-robot.co.jp

2D CAD

*1 Connect the motor/encoder cables. Refer to p. 324 for details on the cables.
*2 The rod moves to the ME during home return. Pay attention to prevent contact between the rod and surrounding parts.
ME: Mechanical end SE: Stroke end

### Standard motor reversing specification (Option code: Blank)

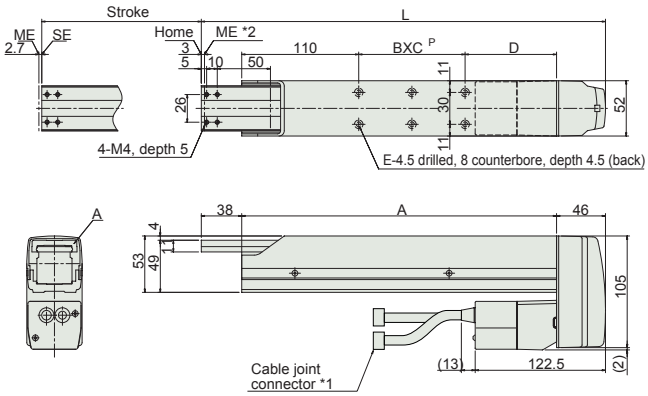


### Motor reversing on right (Option code: MR)

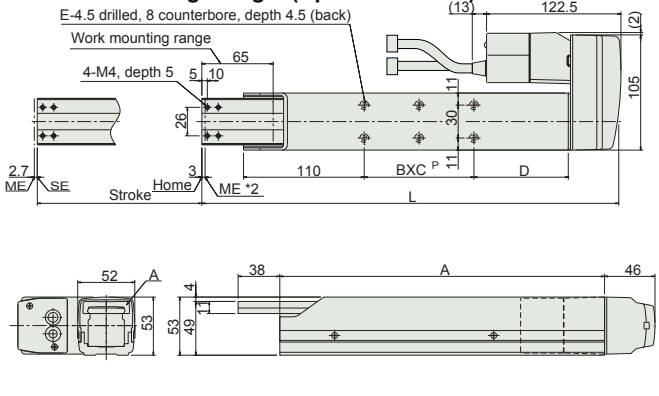


### Motor reversing on left (Option code: ML)

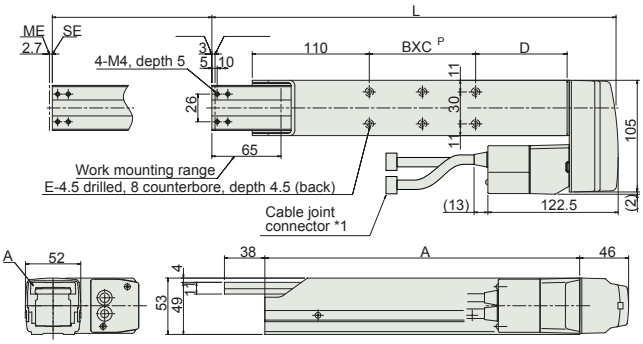


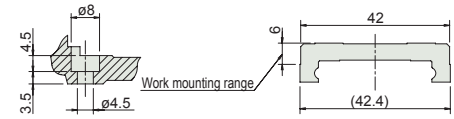


Section view of mounting hole in base

Detail view of A

### Dimensions and Weight by Stroke

| Stroke | 50 | 100 | 150 | 200 |
|---|---|---|---|---|
| L | 280 | 330 | 380 | 430 |
| ℓ | 196 | 246 | 296 | 346 |
| BxC P | 1x30 | 1x50 | 2x50 | 2x50 |
| D | 56 | 86 | 86 | 136 |
| E | 4 | 4 | 6 | 6 |
| Weight (kg) | 2.2 | 2.4 | 2.6 | 2.8 |

Note
The motor must be reversed at right or left if the stroke is 50. The standard reversing specification is not available with a 50 stroke.

# Controller

## Applicable Controllers

RCA series actuators can be operated using the following controllers. Choose the type that best suits your specific purpose.

| Name | External view | Model | Features | Maximum number of positioning points | Input power supply | Power-supply capacity | Reference page |
|---|---|---|---|---|---|---|---|
| Positioner type | | ACON-C-20I-NP-2-0 | Supporting up to 512 positioning points | 512 points | DC24V | Rating: 1.3A Peak: 3.7A | →P315 |
| Positioner type meeting safety category | | ACON-CG-20I-NP-2-0 | | | | | |
| Solenoid valve type | | ACON-CY-20I-NP-2-0 | Same control actions as those applicable to solenoid valves | 3 points | | | |
| Pulse-train input type (differential line driver specification) | | ACON-PL-20I-NP-2-0 | Pulse-train input type supporting a differential line driver | ( - ) | | | |
| Pulse-train input type (open collector specification) | | ACON-PO-20I-NP-2-0 | Pulse-train input type supporting an open collector | | | | |
| Serial communication type | | ACON-SE-20I-0-0 | Dedicated serial communication type | 64 points | | | |
| Program control type | | ASEL-C-1-20①-NP-2-0 | Programmable type capable of operating up to 2 axes | 1500 points | | | →P345 |

* The ASEL model name is based on a 1-axis specification.
*① indicates the encoder type (I: Incremental / A: Absolute).

# RCA-A6R

ROBO Cylinder, Arm Type, Actuator Width 58mm, 24-V Servo Motor
Motor Reversing Specification

■Model Specification Items

**RCA** — **A6R** — [ ] — **30** — [ ] — [ ] — **A1** — [ ] — [ ]

- Series: RCA
- Type: A6R
- Encoder type: I: Incremental specification; A: Absolute specification
- Motor type: 30: Servo motor 30W
- Lead: 12: 12mm; 6: 6mm
- Stroke: 50:50mm ~ 200:200mm (Set in 50-mm steps)
- Applicable controller: A1 : ACON ASEL
- Cable length: N : No cable; P : 1m; S : 3m; M : 5m; X□□ : Specified length; R□□ : Robot cable
- Options: B: Brake (standard); NM: Reversed-home specification; MR: Motor reversing on right; ML: Motor reversing on left

* Refer to p. 31 of the front matter for details on the model specification items.

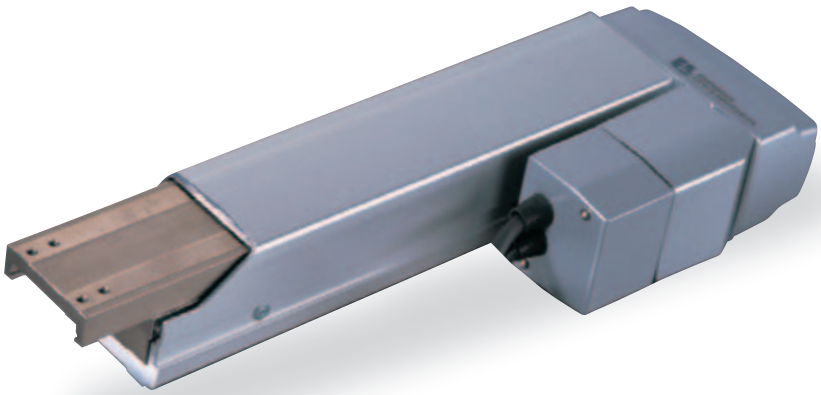

**POINT Selection Points**

(1) When the stroke increases, the maximum speed will drop to prevent the ball screw from reaching a critical speed. Use the actuator specification table below to check the maximum speed at the stroke you desire.
(2) The load capacity is based on operation at an acceleration of 0.2 G. This is the maximum acceleration.

## Actuator Specifications

### ■ Lead and Load Capacity

| Model | Motor output (W) | Lead (mm) | Maximum load capacity Horizontal (kg) | Maximum load capacity Vertical (kg) | Rated thrust (N) | Stroke (mm) |
|---|---|---|---|---|---|---|
| RCA-A6R-①-30-12-②-A1-③-④ | 30 | 12 | – | 3 | 48.4 | 50 ~ 200 (Set in 50-mm steps) |
| RCA-A6R-①-30-6-②-A1-③-④ | | 6 | – | 6 | 96.8 | |

Explanation of numbers ① Encoder type ② Stroke ③ Cable length ④ Options

### ■ Stroke and Maximum Speed

| Lead \ Stroke | 50 ~ 200 (Set in 50-mm steps) |
|---|---|
| 12 | 400 |
| 6 | 200 |

(Unit: mm/s)

## Actuator Specifications

| Item | Description |
|---|---|
| Drive method | Ball screw ø10mm, rolled C10 (Ball screw speed reduced to half by means of timing belt) |
| Positioning repeatability | ±0.02mm |
| Backlash | 0.1mm or less |
| Base | Material: Aluminum with white alumite treatment |
| Allowable load moment | Ma : 8.1N • m Mb : 10.0N • m Mc : 6.5N • m |
| Ambient operating temperature, humidity | 0~40°C, 85% RH or below (non-condensing) |

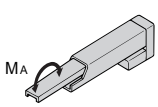


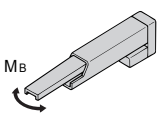


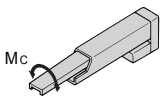

## Dimensions

You can download CAD drawings from our website. www.iai-robot.co.jp

2D CAD

*1 Connect the motor/encoder cables. Refer to p. 324 for details on the cables.
*2 The rod moves to the ME during home return. Pay attention to prevent contact between the rod and surrounding parts.
ME: Mechanical end SE: Stroke end

### Standard motor reversing specification (Option code: Blank)

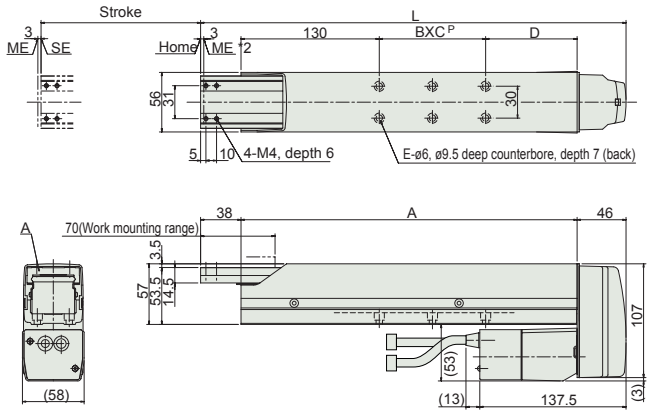


### Motor reversing on right (Option code: MR)

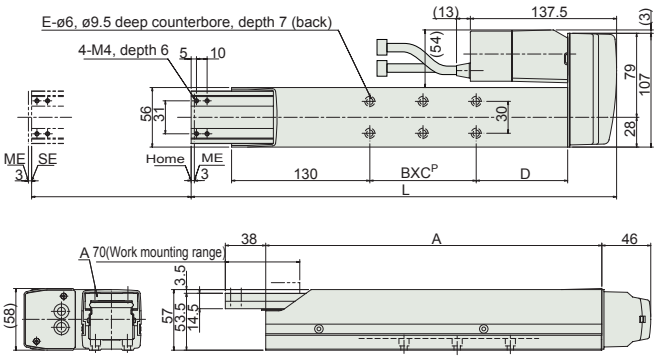


### Motor reversing on left (Option code: ML)

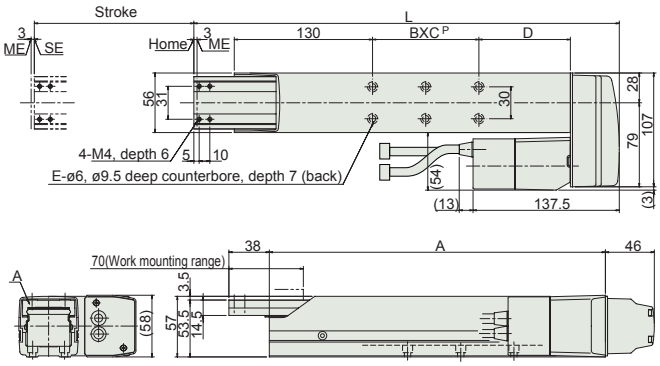


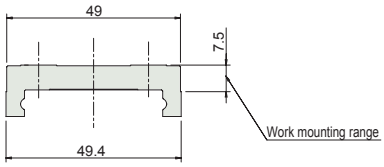


Detail view of A (2:1)

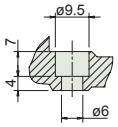


Section view of mounting hole in base (2:1)

### Dimensions and Weight by Stroke

| Stroke | 50 | 100 | 150 | 200 |
|---|---|---|---|---|
| L | 300 | 350 | 400 | 450 |
| ℓ | 216 | 266 | 316 | 366 |
| BxC P | 1x30 | 1x50 | 2x50 | 2x50 |
| D | 56 | 86 | 86 | 136 |
| E | 4 | 4 | 6 | 6 |
| Weight (kg) | 3.0 | 3.3 | 3.6 | 3.9 |

# Controller

## Applicable Controllers

RCA series actuators can be operated using the following controllers. Choose the type that best suits your specific purpose.

| Name | External view | Model | Features | Maximum number of positioning points | Input power supply | Power-supply capacity | Reference page |
|---|---|---|---|---|---|---|---|
| Positioner type | | ACON-C-30I-NP-2-0 | Supporting up to 512 positioning points | 512 points | DC24V | Rating: 1.3A Peak: 3.7A | →P315 |
| Positioner type meeting safety category | | ACON-CG-30I-NP-2-0 | | | | | |
| Solenoid valve type | | ACON-CY-30I-NP-2-0 | Same control actions as those applicable to solenoid valves | 3 points | | | |
| Pulse-train input type (differential line driver specification) | | ACON-PL-30I-NP-2-0 | Pulse-train input type supporting a differential line driver | ( - ) | | | |
| Pulse-train input type (open collector specification) | | ACON-PO-30I-NP-2-0 | Pulse-train input type supporting an open collector | | | | |
| Serial communication type | | ACON-SE-30I-0-0 | Dedicated serial communication type | 64 points | | | |
| Program control type | | ASEL-C-1-30①-NP-2-0 | Programmable type capable of operating up to 2 axes | 1500 points | | | →P345 |

* The ASEL model name is based on a 1-axis specification.
*① indicates the encoder type (I: Incremental / A: Absolute).

ROBO CYLINDER

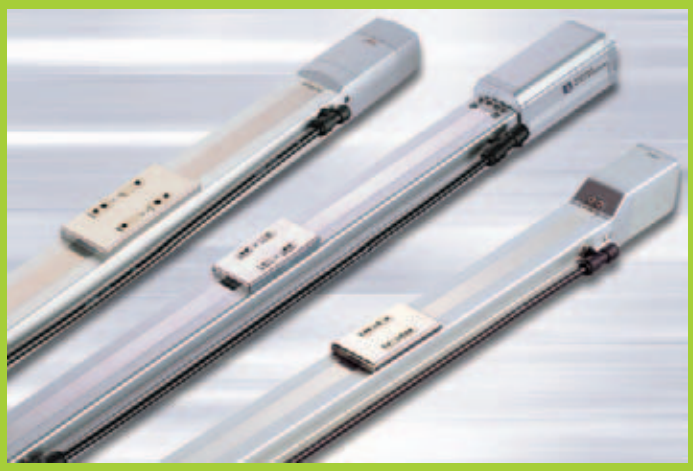

# Cleanroom Type

# RCACR

# RCACR-SA4C

Cleanroom Type ROBO Cylinder, Slider Type, Actuator Width 40mm, 24-V Servo Motor Coupling Specification

■Model Specification Items **RCACR** – **SA4C** – [ ] – **20** – [ ] – [ ] – **A1** – [ ] – [ ]

Series — Type — Encoder type — Motor type — Lead — Stroke — Applicable controller — Cable length — Options

- Encoder type: I: Incremental specification; A: Absolute specification
- Motor type: 20: Servo motor 20W
- Lead: 10: 10mm; 5: 5mm; 2.5: 2.5mm
- Stroke: 50:50mm ~ 400:400mm (Set in 50-mm steps)
- Applicable controller: A1 : ACON, ASEL
- Cable length: N : No cable; P : 1m; S : 3m; M : 5m; X□□ : Specified length; R□□ : Robot cable
- Options: B : Brake; FT : Foot bracket; HS : Home check sensor; NM : Reversed-home specification; SS : Slider spacer; VR : Suction joint on opposite side

* Refer to p. 31 of the front matter for details on the model specification items.

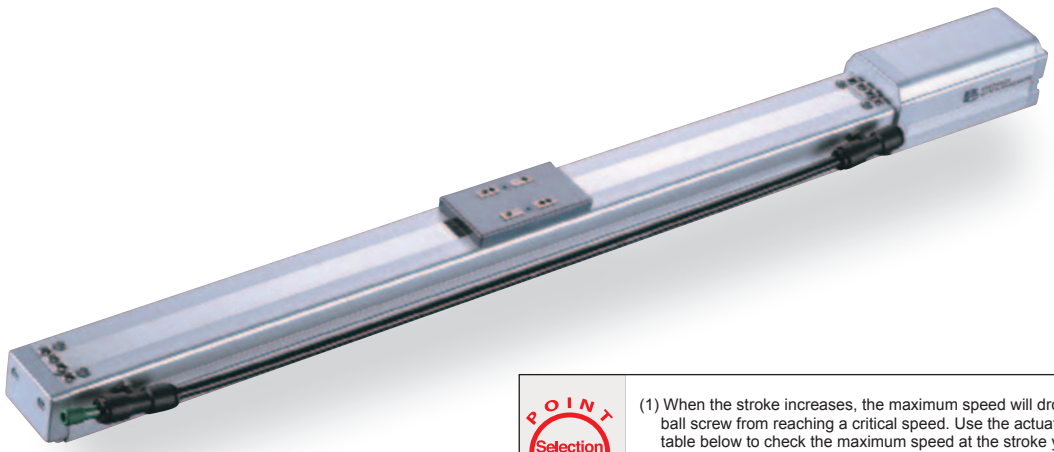

**POINT Selection Points**

(1) When the stroke increases, the maximum speed will drop to prevent the ball screw from reaching a critical speed. Use the actuator specification table below to check the maximum speed at the stroke you desire.
(2) The load capacity is based on operation at an acceleration of 0.3 G (or 0.2 G if the lead is 2.5). This is the maximum acceleration.

## Actuator Specifications

### ■ Lead and Load Capacity

| Model | Motor output (W) | Lead (mm) | Maximum load capacity Horizontal (kg) | Maximum load capacity Vertical (kg) | Rated thrust (N) | Stroke (mm) |
|---|---|---|---|---|---|---|
| RCACR-SA4C-①-20-10-②-A1-③-④ | 20 | 10 | 4 | 1 | 19.6 | 50 ~ 400 (Set in 50-mm steps) |
| RCACR-SA4C-①-20-5-②-A1-③-④ | | 5 | 6 | 2.5 | 39.2 | |
| RCACR-SA4C-①-20-2.5-②-A1-③-④ | | 2.5 | 8 | 4.5 | 78.4 | |

Explanation of numbers ① Encoder type ② Stroke ③ Cable length ④ Options

### ■ Stroke, Maximum Speed and Suction Volume

| Lead \ Stroke | 50 ~ 400 (Set in 50-mm steps) | Suction volume (N ℓ/mm) |
|---|---|---|
| 10 | 665 | 50 |
| 5 | 330 | 30 |
| 2.5 | 165 | 15 |

(Unit: mm/s)

## Actuator Specifications

| Item | Description |
|---|---|
| Drive method | Ball screw ø8mm, rolled C10 |
| Positioning repeatability | ±0.02mm |
| Backlash | 0.05mm or less |
| Base | Material: Aluminum with white alumite treatment |
| Allowable load moment | Ma : 2.7N • m Mb : 3.9N • m Mc : 6.8N • m |
| Overhang load length | Ma direction: 120mm or less, Mb • Mc directions: 120mm or less |
| Grease | Low-dust-raising grease (both ball screw and guide) |
| Cleanliness class | Class 10 (0.1μm) |
| Ambient operating temperature, humidity | 0~40°C, 85% RH or below (non-condensing) |

Direction of allowable load moment

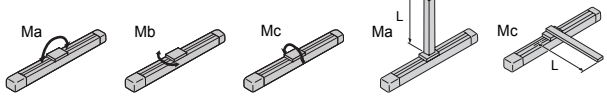


Overhang load length

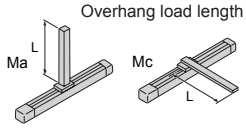

## Dimensions

You can download CAD drawings from our website. www.iai-robot.co.jp

2D CAD

*1 Connect the motor/encoder cables. Refer to p. 324 for details on the cables.
*2 The slider moves to the ME during home return. Pay attention to prevent contact between the slider and surrounding parts.
ME: Mechanical end SE: Stroke end
*3 Reference position for calculating Ma moment

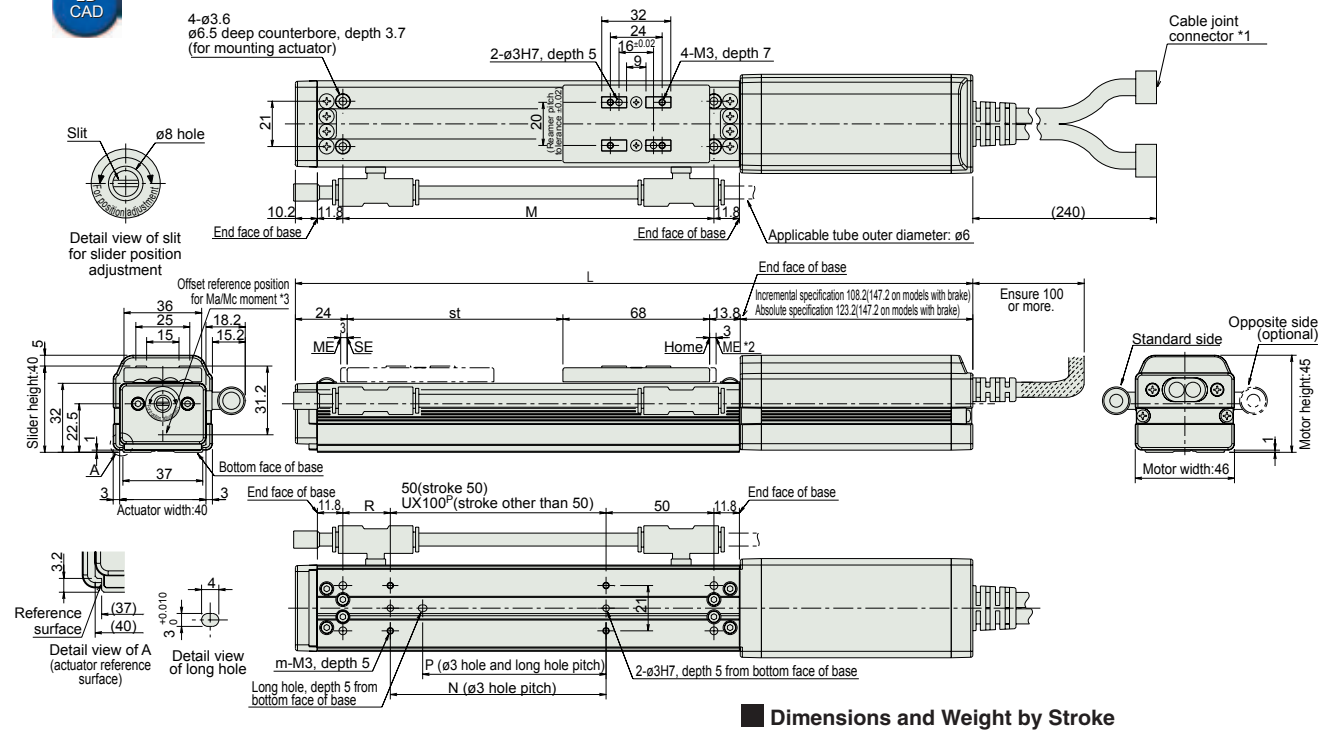


### Dimensions and Weight by Stroke

| Stroke | | | 50 | 100 | 150 | 200 | 250 | 300 | 350 | 400 |
|---|---|---|---|---|---|---|---|---|---|---|
| L | Incremental | Without brake | 264 | 314 | 364 | 414 | 464 | 514 | 564 | 614 |
| | | With brake | 303 | 353 | 403 | 453 | 503 | 553 | 603 | 653 |
| | Absolute | Without brake | 279 | 329 | 379 | 429 | 479 | 529 | 579 | 629 |
| | | With brake | 318 | 368 | 418 | 468 | 518 | 568 | 618 | 668 |
| M | | | 122 | 172 | 222 | 272 | 322 | 372 | 422 | 472 |
| N | | | 50 | 100 | 100 | 200 | 200 | 300 | 300 | 400 |
| P | | | 35 | 85 | 85 | 185 | 185 | 285 | 285 | 385 |
| R | | | 22 | 22 | 72 | 22 | 72 | 22 | 72 | 22 |
| U | | | – | 1 | 1 | 2 | 2 | 3 | 3 | 4 |
| m | | | 4 | 4 | 4 | 6 | 6 | 8 | 8 | 10 |
| Weight (kg) | | | 0.7 | 0.8 | 0.9 | 1 | 1.1 | 1.2 | 1.3 | 1.4 |

# Controller

## Applicable Controllers

RCA series actuators can be operated using the following controllers. Choose the type that best suits your specific purpose.

| Name | External view | Model | Features | Maximum number of positioning points | Input power supply | Power-supply capacity | Reference page |
|---|---|---|---|---|---|---|---|
| Positioner type | | ACON-C-20I-NP-2-0 | Supporting up to 512 positioning points | 512 points | DC24V | Rating: 1.3A, Peak: 3.7A | →P315 |
| Positioner type meeting safety category | | ACON-CG-20I-NP-2-0 | | | | | |
| Solenoid valve type | | ACON-CY-20I-NP-2-0 | Same control actions as those applicable to solenoid valves | 3 points | | | |
| Pulse-train input type (differential line driver specification) | | ACON-PL-20I-NP-2-0 | Pulse-train input type supporting a differential line driver | ( - ) | | | |
| Pulse-train input type (open collector specification) | | ACON-PO-20I-NP-2-0 | Pulse-train input type supporting an open collector | | | | |
| Serial communication type | | ACON-SE-20I-0-0 | Dedicated serial communication type | 64 points | | | |
| Program control type | | ASEL-C-1-20①-NP-2-0 | Programmable type capable of operating up to 2 axes | 1500 points | | | →P345 |

* The ASEL model name is based on a 1-axis specification.
* ① indicates the encoder type (I: Incremental / A: Absolute).

# RCACR-SA5C

Cleanroom Type ROBO Cylinder, Slider Type, Actuator Width 52mm, 24-V Servo Motor Coupling Specification

■Model Specification Items

**RCACR** – **SA5C** – [ ] – **20** – [ ] – [ ] – **A1** – [ ] – [ ]

Series — Type — Encoder type — Motor type — Lead — Stroke — Applicable controller — Cable length — Options

- Encoder type: I: Incremental specification; A: Absolute specification
- Motor type: 20: Servo motor 20W
- Lead: 12: 12mm; 6: 6mm; 3: 3mm
- Stroke: 50:50mm ~ 500:500mm (Set in 50-mm steps)
- Applicable controller: A1: ACON, ASEL
- Cable length: N: No cable; P: 1m; S: 3m; M: 5m; X□□: Specified length; R□□: Robot cable
- Options: B: Brake; FT: Foot bracket; HS: Home check sensor; NM: Reversed-home specification; VR: Suction joint on opposite side

* Refer to p. 31 of the front matter for details on the model specification items.

**POINT Selection Points**

(1) When the stroke increases, the maximum speed will drop to prevent the ball screw from reaching a critical speed. Use the actuator specification table below to check the maximum speed at the stroke you desire.
(2) The load capacity is based on operation at an acceleration of 0.3 G (or 0.2 G if the lead is 3). This is the maximum acceleration.

## Actuator Specifications

### ■Lead and Load Capacity

| Model | Motor output (W) | Lead (mm) | Maximum load capacity Horizontal (kg) | Maximum load capacity Vertical (kg) | Rated thrust (N) | Stroke (mm) |
|---|---|---|---|---|---|---|
| RCACR-SA5C-①-20-12-②-A1-③-④ | 20 | 12 | 4 | 1 | 16.7 | 50 ~ 500 (Set in 50-mm steps) |
| RCACR-SA5C-①-20-6-②-A1-③-④ | | 6 | 8 | 2 | 33.3 | |
| RCACR-SA5C-①-20-3-②-A1-③-④ | | 3 | 12 | 4 | 65.7 | |

Explanation of numbers ① Encoder type ② Stroke ③ Cable length ④ Options

### ■Stroke, Maximum Speed and Suction Volume

| Lead \ Stroke | 50 ~ 450 (Set in 50-mm steps) | 500 (mm) | Suction volume (N ℓ/mm) |
|---|---|---|---|
| 12 | 800 | 760 | 50 |
| 6 | 400 | 380 | 30 |
| 3 | 200 | 190 | 15 |

(Unit: mm/s)

## Actuator Specifications

| Item | Description |
|---|---|
| Drive method | Ball screw ø10mm, rolled C10 |
| Positioning repeatability | ±0.02mm |
| Backlash | 0.1mm or less |
| Base | Material: Aluminum with white alumite treatment |
| Allowable load moment | Ma : 2.7N • m Mb : 3.9N • m Mc : 6.8N • m |
| Overhang load length | Ma direction: 150mm or less, Mb • Mc directions: 150mm or less |
| Grease | Low-dust-raising grease (both ball screw and guide) |
| Cleanliness class | Class 10 (0.1μm) |
| Ambient operating temperature, humidity | 0~40°C, 85% RH or below (non-condensing) |

Direction of allowable load moment

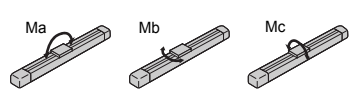


Overhang load length

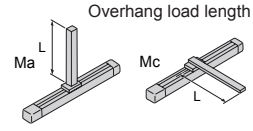

## Dimensions

You can download CAD drawings from our website. www.iai-robot.co.jp

2D CAD

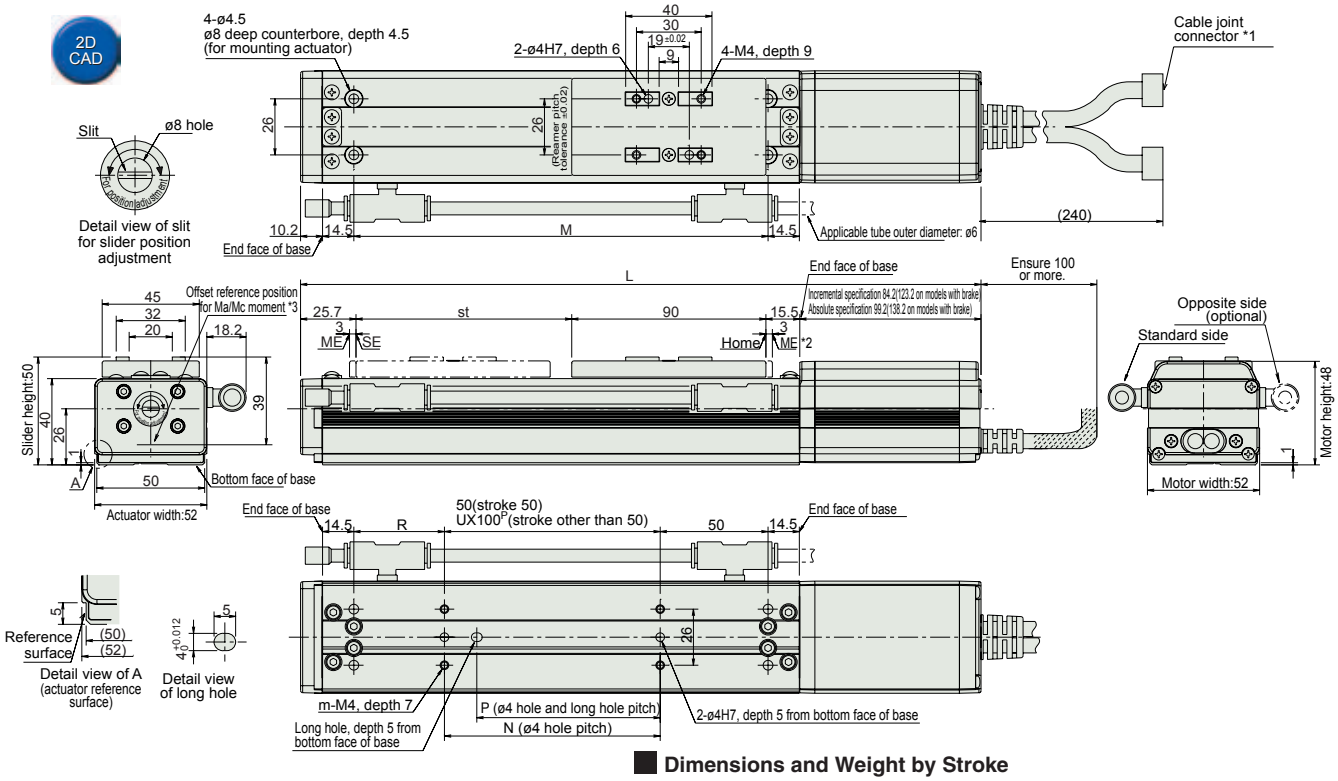


*1 Connect the motor/encoder cables. Refer to p. 324 for details on the cables.
*2 The slider moves to the ME during home return. Pay attention to prevent contact between the slider and surrounding parts.
ME: Mechanical end SE: Stroke end
*3 Reference position for calculating Ma moment

### Dimensions and Weight by Stroke

| Stroke | | | 50 | 100 | 150 | 200 | 250 | 300 | 350 | 400 | 450 | 500 |
|---|---|---|---|---|---|---|---|---|---|---|---|---|
| L | Incremental | Without brake | 265.4 | 315.4 | 365.4 | 415.4 | 465.4 | 515.4 | 565.4 | 615.4 | 665.4 | 715.4 |
| | | With brake | 304.4 | 354.4 | 404.4 | 454.4 | 504.4 | 554.4 | 604.4 | 654.4 | 704.4 | 754.4 |
| | Absolute | Without brake | 280.4 | 330.4 | 380.4 | 430.4 | 480.4 | 530.4 | 580.4 | 630.4 | 680.4 | 730.4 |
| | | With brake | 319.4 | 369.4 | 419.4 | 469.4 | 519.4 | 569.4 | 619.4 | 669.4 | 719.4 | 769.4 |
| M | | | 142 | 192 | 242 | 292 | 342 | 392 | 442 | 492 | 542 | 592 |
| N | | | 50 | 100 | 100 | 200 | 200 | 300 | 300 | 400 | 400 | 500 |
| P | | | 35 | 85 | 85 | 185 | 185 | 285 | 285 | 385 | 385 | 485 |
| R | | | 42 | 72 | 92 | 42 | 92 | 42 | 92 | 42 | 92 | 42 |
| U | | | – | 1 | 1 | 2 | 2 | 3 | 3 | 4 | 4 | 5 |
| m | | | 4 | 4 | 4 | 6 | 6 | 8 | 8 | 10 | 10 | 12 |
| Weight (kg) | | | 1.3 | 1.4 | 1.5 | 1.6 | 1.7 | 1.8 | 1.9 | 2 | 2.1 | 2.2 |

# Controller

## Applicable Controllers

RCA series actuators can be operated using the following controllers. Choose the type that best suits your specific purpose.

| Name | External view | Model | Features | Maximum number of positioning points | Input power supply | Power-supply capacity | Reference page |
|---|---|---|---|---|---|---|---|
| Positioner type | | ACON-C-20I-NP-2-0 | Supporting up to 512 positioning points | 512 points | DC24V | Rating: 1.3A, Peak: 3.7A | →P315 |
| Positioner type meeting safety category | | ACON-CG-20I-NP-2-0 | | | | | |
| Solenoid valve type | | ACON-CY-20I-NP-2-0 | Same control actions as those applicable to solenoid valves | 3 points | | | |
| Pulse-train input type (differential line driver specification) | | ACON-PL-20I-NP-2-0 | Pulse-train input type supporting a differential line driver | ( - ) | | | |
| Pulse-train input type (open collector specification) | | ACON-PO-20I-NP-2-0 | Pulse-train input type supporting an open collector | | | | |
| Serial communication type | | ACON-SE-20I-0-0 | Dedicated serial communication type | 64 points | | | |
| Program control type | | ASEL-C-1-20①-NP-2-0 | Programmable type capable of operating up to 2 axes | 1500 points | | | →P345 |

* The ASEL model name is based on a 1-axis specification.
* ① indicates the encoder type (I: Incremental / A: Absolute).

# RCACR-SA6C

Cleanroom Type ROBO Cylinder, Slider Type, Actuator Width 58mm, 24-V Servo Motor Coupling Specification

■Model Specification Items **RCACR** – **SA6C** – □ – **30** – □ – □ – **A1** – □ – □

Series — Type — Encoder type — Motor type — Lead — Stroke — Applicable controller — Cable length — Options

- Encoder type: I: Incremental specification; A: Absolute specification
- Motor type: 30: Servo motor 30W
- Lead: 12: 12mm; 6: 6mm; 3: 3mm
- Stroke: 50:50mm ~ 600:600mm (Set in 50-mm steps)
- Applicable controller: A1: ACON, ASEL
- Cable length: N: No cable; P: 1m; S: 3m; M: 5m; X□□: Specified length; R□□: Robot cable
- Options: B: Brake; FT: Foot bracket; HS: Home check sensor; NM: Reversed-home specification; VR: Suction joint on opposite side

* Refer to p. 31 of the front matter for details on the model specification items.

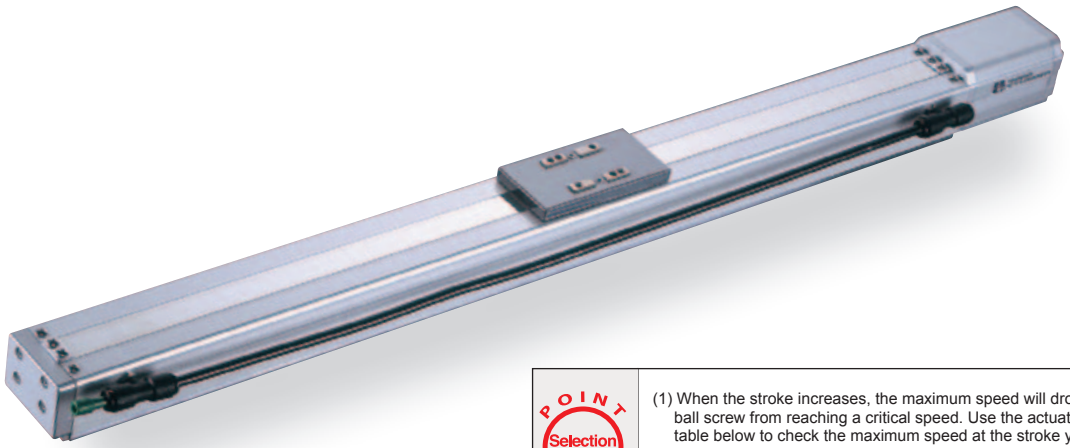

**POINT Selection Points**

(1) When the stroke increases, the maximum speed will drop to prevent the ball screw from reaching a critical speed. Use the actuator specification table below to check the maximum speed at the stroke you desire.
(2) The load capacity is based on operation at an acceleration of 0.3 G (or 0.2 G if the lead is 3). This is the maximum acceleration.

## Actuator Specifications

### ■Lead and Load Capacity

| Model | Motor output (W) | Lead (mm) | Maximum load capacity Horizontal (kg) | Maximum load capacity Vertical (kg) | Rated thrust (N) | Stroke (mm) |
|---|---|---|---|---|---|---|
| RCACR-SA6C-①-30-12-②-A1-③-④ | 30 | 12 | 6 | 1.5 | 24.2 | 50 ~ 600 (Set in 50-mm steps) |
| RCACR-SA6C-①-30-6-②-A1-③-④ | | 6 | 12 | 3 | 48.4 | |
| RCACR-SA6C-①-30-3-②-A1-③-④ | | 3 | 18 | 6 | 96.8 | |

Explanation of numbers ① Encoder type ② Stroke ③ Cable length ④ Options

### ■Stroke, Maximum Speed and Suction Volume

| Lead \ Stroke | 50 ~ 450 (Set in 50-mm steps) | 500 (mm) | 550 (mm) | 600 (mm) | Suction volume (N ℓ/mm) |
|---|---|---|---|---|---|
| 10 | 800 | 760 | 640 | 540 | 50 |
| 5 | 400 | 380 | 320 | 270 | 30 |
| 2.5 | 200 | 190 | 160 | 135 | 15 |

(Unit: mm/s)

## Actuator Specifications

| Item | Description |
|---|---|
| Drive method | Ball screw ø10mm, rolled C10 |
| Positioning repeatability | ±0.02mm |
| Backlash | 0.1mm or less |
| Base | Material: Aluminum with white alumite treatment |
| Allowable load moment | Ma : 8.9N • m Mb : 12.7N • m Mc : 18.6N • m |
| Overhang load length | Ma direction: 220mm or less, Mb • Mc directions: 220mm or less |
| Grease | Low-dust-raising grease (both ball screw and guide) |
| Cleanliness class | Class 10 (0.1μm) |
| Ambient operating temperature, humidity | 0~40°C, 85% RH or below (non-condensing) |

Direction of allowable load moment

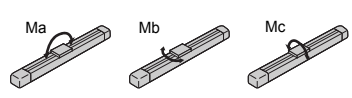


Overhang load length

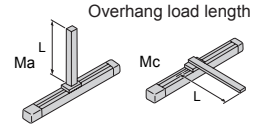

## Dimensions

You can download CAD drawings from our website. www.iai-robot.co.jp

2D CAD

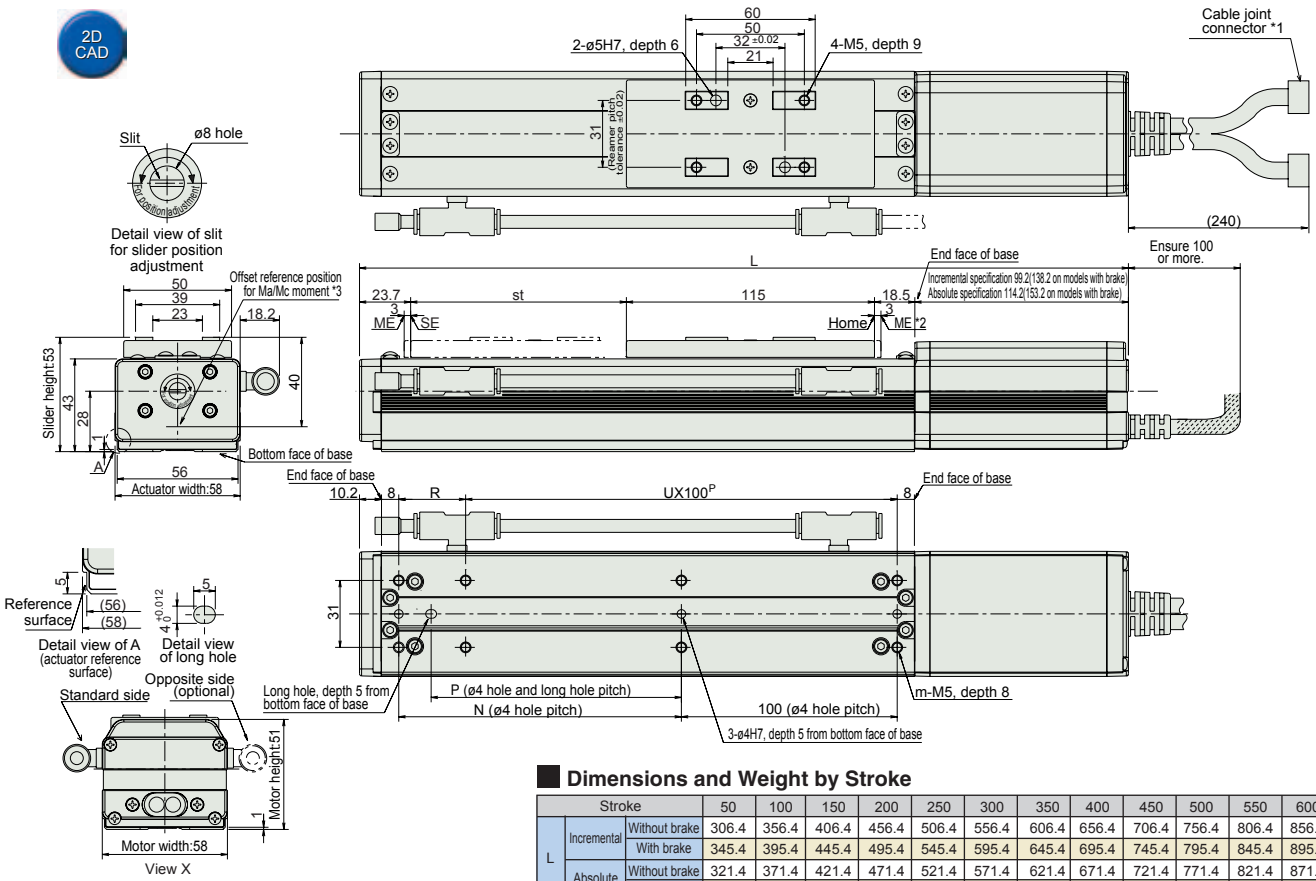


*1 Connect the motor/encoder cables. Refer to p. 324 for details on the cables.
*2 The slider moves to the ME during home return. Pay attention to prevent contact between the slider and surrounding parts.
ME: Mechanical end SE: Stroke end
*3 Reference position for calculating Ma moment

### Dimensions and Weight by Stroke

| Stroke | | | 50 | 100 | 150 | 200 | 250 | 300 | 350 | 400 | 450 | 500 | 550 | 600 |
|---|---|---|---|---|---|---|---|---|---|---|---|---|---|---|
| L | Incremental | Without brake | 306.4 | 356.4 | 406.4 | 456.4 | 506.4 | 556.4 | 606.4 | 656.4 | 706.4 | 756.4 | 806.4 | 856.4 |
| | | With brake | 345.4 | 395.4 | 445.4 | 495.4 | 545.4 | 595.4 | 645.4 | 695.4 | 745.4 | 795.4 | 845.4 | 895.4 |
| | Absolute | Without brake | 321.4 | 371.4 | 421.4 | 471.4 | 521.4 | 571.4 | 621.4 | 671.4 | 721.4 | 771.4 | 821.4 | 871.4 |
| | | With brake | 360.4 | 410.4 | 460.4 | 510.4 | 560.4 | 610.4 | 660.4 | 710.4 | 760.4 | 810.4 | 860.4 | 910.4 |
| N | | | 81 | 131 | 181 | 231 | 281 | 331 | 381 | 431 | 481 | 531 | 581 | 631 |
| P | | | 66 | 116 | 166 | 216 | 266 | 316 | 366 | 416 | 466 | 516 | 566 | 616 |
| R | | | 81 | 31 | 81 | 31 | 81 | 31 | 81 | 31 | 81 | 31 | 81 | 31 |
| U | | | 1 | 2 | 2 | 3 | 3 | 4 | 4 | 5 | 5 | 6 | 6 | 7 |
| m | | | 6 | 8 | 8 | 10 | 10 | 12 | 12 | 14 | 14 | 16 | 16 | 18 |
| Weight (kg) | | | 1.4 | 1.6 | 1.8 | 2 | 2.2 | 2.4 | 2.6 | 2.8 | 3 | 3.2 | 3.4 | 3.6 |

# Controller

## Applicable Controllers

RCA series actuators can be operated using the following controllers. Choose the type that best suits your specific purpose.

| Name | External view | Model | Features | Maximum number of positioning points | Input power supply | Power-supply capacity | Reference page |
|---|---|---|---|---|---|---|---|
| Positioner type | | ACON-C-30I-NP-2-0 | Supporting up to 512 positioning points | 512 points | DC24V | Rating: 1.3A, Peak: 4.2A | →P315 |
| Positioner type meeting safety category | | ACON-CG-30I-NP-2-0 | | | | | |
| Solenoid valve type | | ACON-CY-30I-NP-2-0 | Same control actions as those applicable to solenoid valves | 3 points | | | |
| Pulse-train input type (differential line driver specification) | | ACON-PL-30I-NP-2-0 | Pulse-train input type supporting a differential line driver | ( - ) | | | |
| Pulse-train input type (open collector specification) | | ACON-PO-30I-NP-2-0 | Pulse-train input type supporting an open collector | | | | |
| Serial communication type | | ACON-SE-30I-0-0 | Dedicated serial communication type | 64 points | | | |
| Program control type | | ASEL-C-1-30①-NP-2-0 | Programmable type capable of operating up to 2 axes | 1500 points | | | →P345 |

* The ASEL model name is based on a 1-axis specification.
* ① indicates the encoder type (I: Incremental / A: Absolute).

# RCACR-SA5D

Cleanroom Type ROBO Cylinder, Slider Type, Actuator Width 52mm, 24-V Servo Motor Built-In (Direct-Coupled) Motor Specification

■Model Specification Items **RCACR** – **SA5D** – □ – **20** – □ – □ – **A1** – □ – □

- Series: RCACR
- Type: SA5D
- Encoder type: I: Incremental specification; A: Absolute specification
- Motor type: 20: Servo motor 20W
- Lead: 12: 12mm; 6: 6mm; 3: 3mm
- Stroke: 50:50mm ~ 500:500mm (Set in 50-mm steps)
- Applicable controller: A1 : ACON, ASEL
- Cable length: N : No cable; P : 1m; S : 3m; M : 5m; X□□ : Specified length; R□□ : Robot cable
- Options: BE : Brake (wire taken out from end); BL : Brake (wire taken out from left); BR : Brake (wire taken out from right); NM: Reversed-home specification; VR : Suction joint on opposite side

* Refer to p. 31 of the front matter for details on the model specification items.

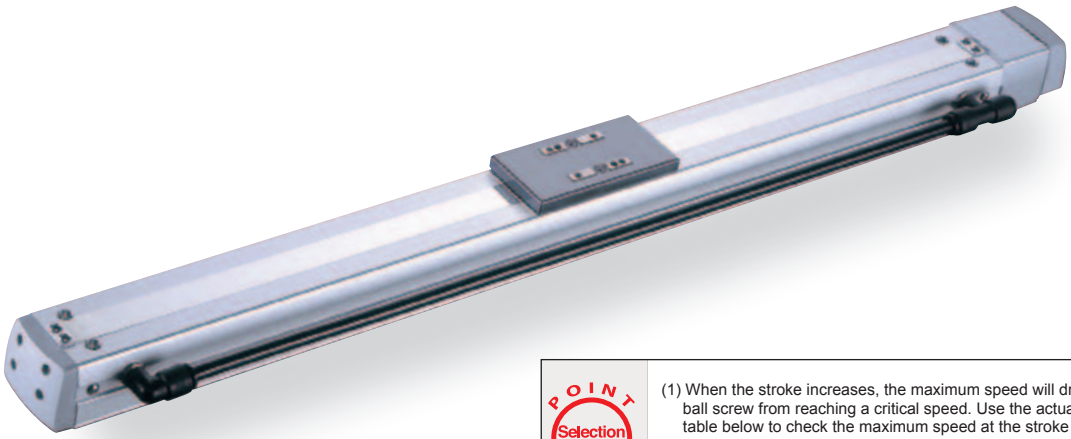

**POINT Selection Points**

(1) When the stroke increases, the maximum speed will drop to prevent the ball screw from reaching a critical speed. Use the actuator specification table below to check the maximum speed at the stroke you desire.
(2) The load capacity is based on operation at an acceleration of 0.3 G (or 0.2 G if the lead is 3). This is the maximum acceleration.

## Actuator Specifications

### ■ Lead and Load Capacity

| Model | Motor output (W) | Lead (mm) | Maximum load capacity Horizontal (kg) | Maximum load capacity Vertical (kg) | Rated thrust (N) | Stroke (mm) |
|---|---|---|---|---|---|---|
| RCACR-SA5D-①-20-12-②-A1-③-④ | 20 | 12 | 4 | 1 | 16.7 | 50 ~ 500 (Set in 50-mm steps) |
| RCACR-SA5D-①-20-6-②-A1-③-④ | | 6 | 8 | 2 | 33.3 | |
| RCACR-SA5D-①-20-3-②-A1-③-④ | | 3 | 12 | 4 | 65.7 | |

Explanation of numbers ① Encoder type ② Stroke ③ Cable length ④ Options

### ■ Stroke, Maximum Speed and Suction Volume

| Lead \ Stroke | 50 ~ 450 (Set in 50-mm steps) | 500 (mm) | Suction volume (N ℓ/mm) |
|---|---|---|---|
| 10 | 800 | 760 | 50 |
| 5 | 400 | 380 | 30 |
| 2.5 | 200 | 190 | 15 |

(Unit: mm/s)

## Actuator Specifications

| Item | Description |
|---|---|
| Drive method | Ball screw ø10mm, rolled C10 |
| Positioning repeatability | ±0.02mm |
| Backlash | 0.1mm or less |
| Base | Material: Aluminum with white alumite treatment |
| Allowable load moment | Ma : 8.9N • m Mb : 12.7N • m Mc : 18.6N • m |
| Overhang load length | Ma direction: 150mm or less, Mb • Mc directions: 150mm or less |
| Grease | Low-dust-raising grease (both ball screw and guide) |
| Cleanliness class | Class 10 (0.1μm) |
| Ambient operating temperature, humidity | 0~40°C, 85% RH or below (non-condensing) |

Direction of allowable load moment

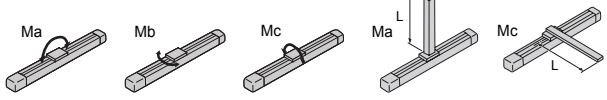


Overhang load length

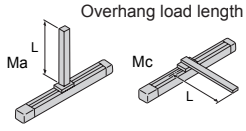

## Dimensions

You can download CAD drawings from our website. www.iai-robot.co.jp

2D CAD

* To change the home direction, the actuator must be returned to IAI for adjustment.
* With the reversed-home specification (NM), the home is positioned at approx. 3 mm toward the motor from the ME on the counter-motor side.

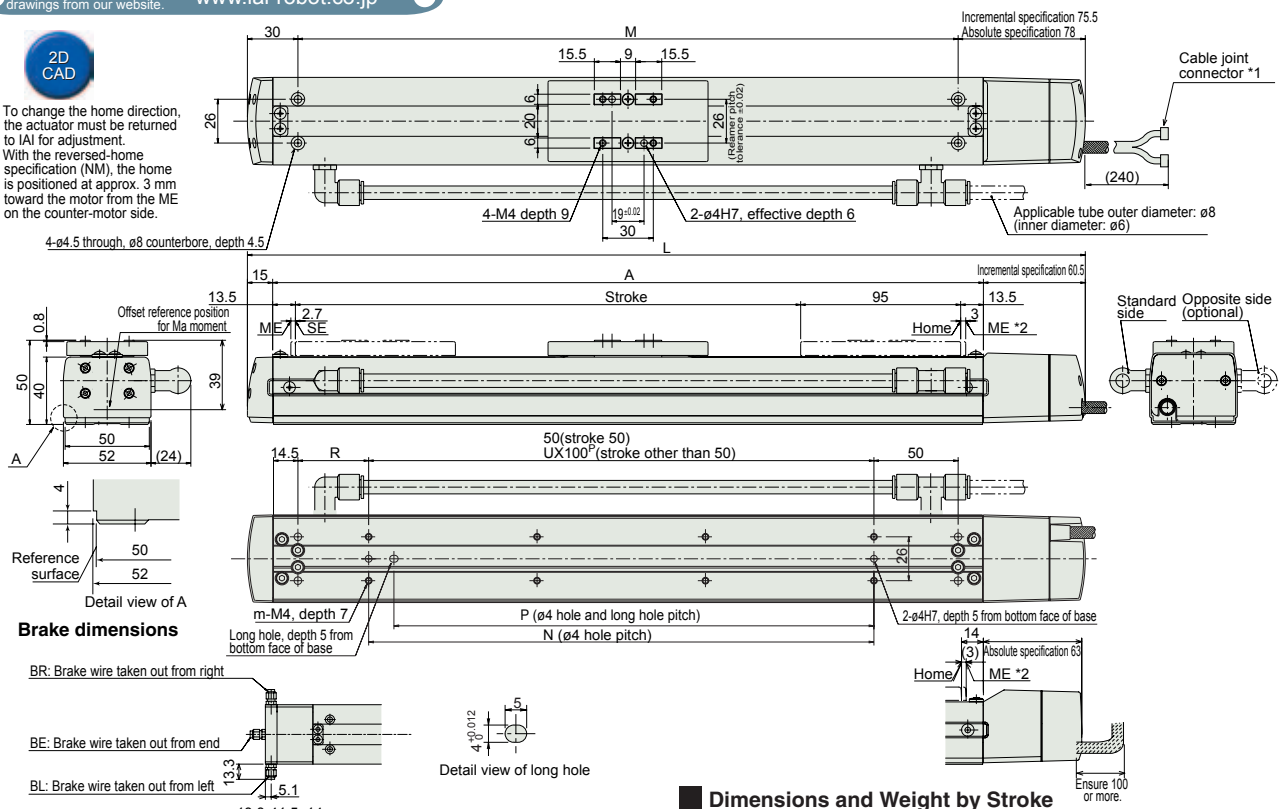


### Brake dimensions

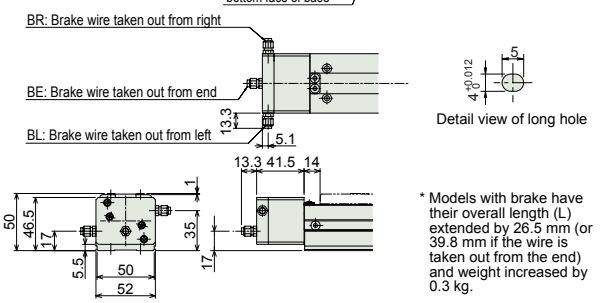


* Models with brake have their overall length (L) extended by 26.5 mm (or 39.8 mm if the wire is taken out from the end) and weight increased by 0.3 kg.

*1 Connect the motor/encoder cables. Refer to p. 324 for details on the cables.
*2 The slider moves to the ME during home return. Pay attention to prevent contact between the slider and surrounding parts.
ME: Mechanical end SE: Stroke end
*3 Reference position for calculating Ma moment

### Dimensions and Weight by Stroke

| Stroke | | 50 | 100 | 150 | 200 | 250 | 300 | 350 | 400 | 450 | 500 |
|---|---|---|---|---|---|---|---|---|---|---|---|
| L | Incremental | 247.5 | 297.5 | 347.5 | 397.5 | 447.5 | 497.5 | 547.5 | 597.5 | 647.5 | 697.5 |
| | Absolute | 250 | 300 | 350 | 400 | 450 | 500 | 550 | 600 | 650 | 700 |
| A | | 172 | 222 | 272 | 322 | 372 | 422 | 472 | 522 | 572 | 622 |
| M | | 142 | 192 | 242 | 292 | 342 | 392 | 442 | 492 | 542 | 592 |
| N | | 50 | 100 | 100 | 200 | 200 | 300 | 300 | 400 | 400 | 500 |
| P | | 35 | 85 | 85 | 185 | 185 | 285 | 285 | 385 | 385 | 485 |
| R | | 92 | 42 | 92 | 42 | 92 | 42 | 92 | 42 | 92 | 42 |
| U | | – | 1 | 1 | 2 | 2 | 3 | 3 | 4 | 4 | 5 |
| m | | 4 | 4 | 4 | 6 | 6 | 8 | 8 | 10 | 10 | 12 |
| Weight (kg) | | 1.2 | 1.3 | 1.4 | 1.5 | 1.6 | 1.7 | 1.8 | 1.9 | 2.0 | 2.1 |

# Controller

## Applicable Controllers

RCA series actuators can be operated using the following controllers. Choose the type that best suits your specific purpose.

| Name | External view | Model | Features | Maximum number of positioning points | Input power supply | Power-supply capacity | Reference page |
|---|---|---|---|---|---|---|---|
| Positioner type | | ACON-C-20I-NP-2-0 | Supporting up to 512 positioning points | 512 points | DC24V | Rating: 1.3A, Peak: 3.7A | →P315 |
| Positioner type meeting safety category | | ACON-CG-20I-NP-2-0 | | | | | |
| Solenoid valve type | | ACON-CY-20I-NP-2-0 | Same control actions as those applicable to solenoid valves | 3 points | | | |
| Pulse-train input type (differential line driver specification) | | ACON-PL-20I-NP-2-0 | Pulse-train input type supporting a differential line driver | ( - ) | | | |
| Pulse-train input type (open collector specification) | | ACON-PO-20I-NP-2-0 | Pulse-train input type supporting an open collector | | | | |
| Serial communication type | | ACON-SE-20I-0-0 | Dedicated serial communication type | 64 points | | | |
| Program control type | | ASEL-C-1-20①-NP-2-0 | Programmable type capable of operating up to 2 axes | 1500 points | | | →P345 |

* The ASEL model name is based on a 1-axis specification.
* ① indicates the encoder type (I: Incremental / A: Absolute).

# RCACR-SA6D

Cleanroom Type ROBO Cylinder, Slider Type, Actuator Width 58mm, 24-V Servo Motor Built-In (Direct-Coupled) Motor Specification

■Model Specification Items **RCACR** – **SA6D** – □ – **30** – □ – □ – **A1** – □ – □

- Series: RCACR
- Type: SA6D
- Encoder type: I: Incremental specification; A: Absolute specification
- Motor type: 30: Servo motor 30W
- Lead: 12: 12mm; 6: 6mm; 3: 3mm
- Stroke: 50:50mm ~ 600:600mm (Set in 50-mm steps)
- Applicable controller: A1 : ACON ASEL
- Cable length: N : No cable; P : 1m; S : 3m; M : 5m; X□□ : Specified length; R□□ : Robot cable
- Options: BE : Brake (wire taken out from end); BL : Brake (wire taken out from left); BR : Brake (wire taken out from right); NM: Reversed-home specification; VR : Suction joint on opposite side

* Refer to p. 31 of the front matter for details on the model specification items.

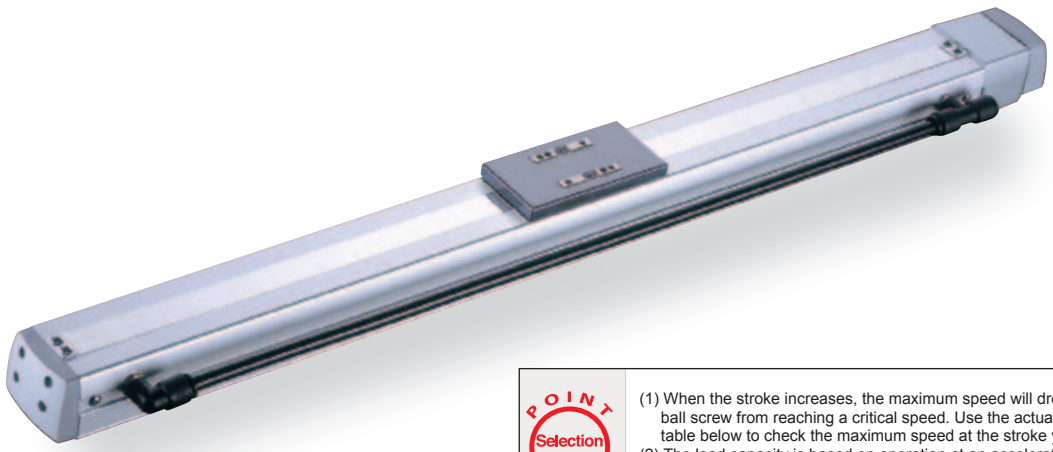

**POINT Selection Points**

(1) When the stroke increases, the maximum speed will drop to prevent the ball screw from reaching a critical speed. Use the actuator specification table below to check the maximum speed at the stroke you desire.
(2) The load capacity is based on operation at an acceleration of 0.3 G (or 0.2 G if the lead is 3). This is the maximum acceleration.

## Actuator Specifications

### ■Lead and Load Capacity

| Model | Motor output (W) | Lead (mm) | Maximum load capacity Horizontal (kg) | Maximum load capacity Vertical (kg) | Rated thrust (N) | Stroke (mm) |
|---|---|---|---|---|---|---|
| RCACR-SA6D-①-30-12-②-A1-③-④ | 30 | 12 | 6 | 1.5 | 24.2 | 50 ~ 600 (Set in 50-mm steps) |
| RCACR-SA6D-①-30-6-②-A1-③-④ | | 6 | 12 | 3 | 48.4 | |
| RCACR-SA6D-①-30-3-②-A1-③-④ | | 3 | 18 | 6 | 96.8 | |

Explanation of numbers ① Encoder type ② Stroke ③ Cable length ④ Options

### ■Stroke, Maximum Speed and Suction Volume

| Lead \ Stroke | 50 ~ 450 (Set in 50-mm steps) | 500 (mm) | 550 (mm) | 600 (mm) | Suction volume (N ℓ/mm) |
|---|---|---|---|---|---|
| 12 | 800 | 760 | 640 | 540 | 50 |
| 6 | 400 | 380 | 320 | 270 | 30 |
| 3 | 200 | 190 | 160 | 135 | 15 |

(Unit: mm/s)

## Actuator Specifications

| Item | Description |
|---|---|
| Drive method | Ball screw ø10mm, rolled C10 |
| Positioning repeatability | ±0.02mm |
| Backlash | 0.1mm or less |
| Base | Material: Aluminum with white alumite treatment |
| Allowable load moment | Ma : 8.9N • m Mb : 12.7N • m Mc : 18.6N • m |
| Overhang load length | Ma direction: 220mm or less, Mb • Mc directions: 220mm or less |
| Grease | Low-dust-raising grease (both ball screw and guide) |
| Cleanliness class | Class 10 (0.1μm) |
| Ambient operating temperature, humidity | 0~40°C, 85% RH or below (non-condensing) |

Direction of allowable load moment

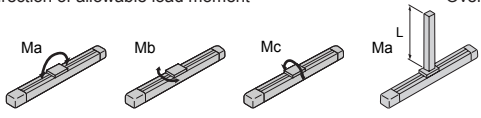


Overhang load length

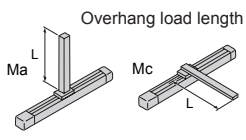

## Dimensions

You can download CAD drawings from our website. www.iai-robot.co.jp

2D CAD

*1 Connect the motor/encoder cables. Refer to p. 324 for details on the cables.
*2 The slider moves to the ME during home return. Pay attention to prevent contact between the slider and surrounding parts.
ME: Mechanical end
SE: Stroke end
*3 Reference position for calculating Ma moment

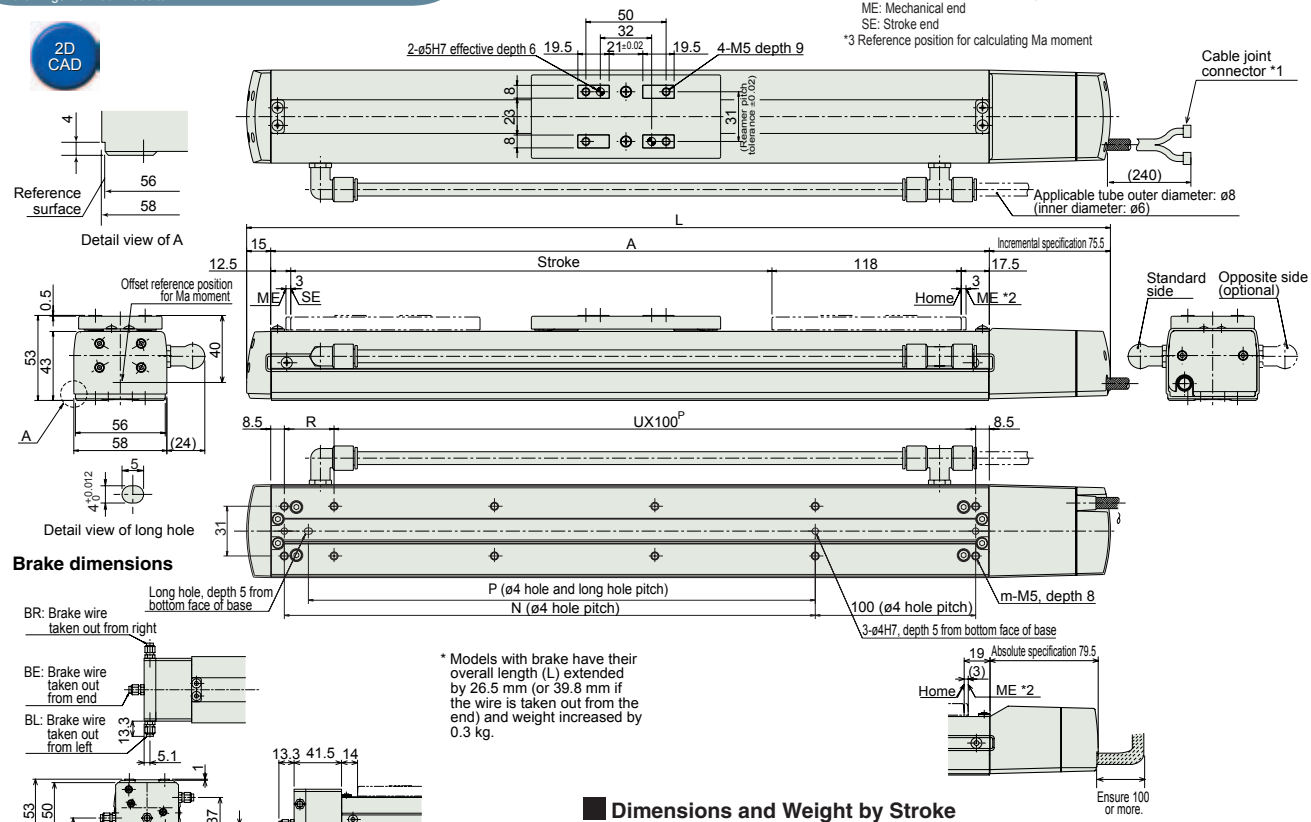


### Brake dimensions

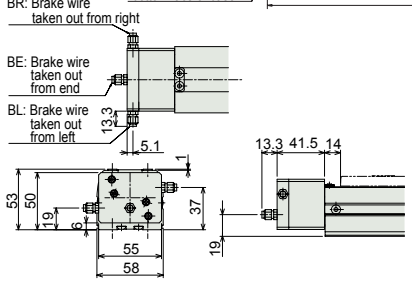


* Models with brake have their overall length (L) extended by 26.5 mm (or 39.8 mm if the wire is taken out from the end) and weight increased by 0.3 kg.

* To change the home direction, the actuator must be returned to IAI for adjustment.
* With the reversed-home specification (NM), the home is positioned at approx. 3 mm toward the motor from the ME on the counter-motor side.

### Dimensions and Weight by Stroke

| Stroke | | 50 | 100 | 150 | 200 | 250 | 300 | 350 | 400 | 450 | 500 | 550 | 600 |
|---|---|---|---|---|---|---|---|---|---|---|---|---|---|
| L | Incremental | 288.5 | 338.5 | 388.5 | 438.5 | 488.5 | 538.5 | 588.5 | 638.5 | 688.5 | 738.5 | 788.5 | 838.5 |
| | Absolute | 292.5 | 342.5 | 392.5 | 442.5 | 492.5 | 542.5 | 592.5 | 642.5 | 692.5 | 742.5 | 792.5 | 842.5 |
| A | | 198 | 248 | 298 | 348 | 398 | 448 | 498 | 548 | 598 | 648 | 698 | 748 |
| N | | 81 | 131 | 181 | 231 | 281 | 331 | 381 | 431 | 481 | 531 | 581 | 631 |
| P | | 66 | 116 | 166 | 216 | 266 | 316 | 366 | 416 | 466 | 516 | 566 | 616 |
| R | | 81 | 31 | 81 | 31 | 81 | 31 | 81 | 31 | 81 | 31 | 81 | 31 |
| U | | 1 | 2 | 2 | 3 | 3 | 4 | 4 | 5 | 5 | 6 | 6 | 7 |
| m | | 6 | 8 | 8 | 10 | 10 | 12 | 12 | 14 | 14 | 16 | 16 | 18 |
| Weight (kg) | | 1.3 | 1.5 | 1.7 | 1.9 | 2.1 | 2.3 | 2.5 | 2.7 | 2.9 | 3.1 | 3.3 | 3.5 |

# Controller

## Applicable Controllers

RCA series actuators can be operated using the following controllers. Choose the type that best suits your specific purpose.

| Name | External view | Model | Features | Maximum number of positioning points | Input power supply | Power-supply capacity | Reference page |
|---|---|---|---|---|---|---|---|
| Positioner type | | ACON-C-30I-NP-2-0 | Supporting up to 512 positioning points | 512 points | DC24V | Rating: 1.3A, Peak: 4.2A | →P315 |
| Positioner type meeting safety category | | ACON-CG-30I-NP-2-0 | | | | | |
| Solenoid valve type | | ACON-CY-30I-NP-2-0 | Same control actions as those applicable to solenoid valves | 3 points | | | |
| Pulse-train input type (differential line driver specification) | | ACON-PL-30I-NP-2-0 | Pulse-train input type supporting a differential line driver | ( - ) | | | |
| Pulse-train input type (open collector specification) | | ACON-PO-30I-NP-2-0 | Pulse-train input type supporting an open collector | | | | |
| Serial communication type | | ACON-SE-30I-0-0 | Dedicated serial communication type | 64 points | | | |
| Program control type | | ASEL-C-1-30①-NP-2-0 | Programmable type capable of operating up to 2 axes | 1500 points | | | →P345 |

* The ASEL model name is based on a 1-axis specification.
* ① indicates the encoder type (I: Incremental / A: Absolute).

ROBO CYLINDER

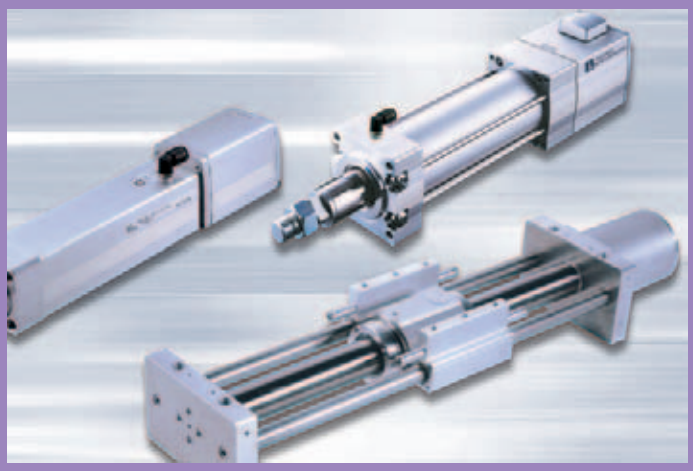

# Dustproof / Splash-Proof Type

# RCAW

# RCAW-RA3C/RA3D/RA3R

ROBO Cylinder, Splash-Proof Rod Type, Actuator Diameter ø32mm, 24-V Servo Motor
Coupling Specification//Built-In Specification/Motor Reversing Specification

■Model Specification Items **RCAW** — □ — **I** — **20** — □ — □ — **A1** — □ — □

| Series | Type | Encoder type | Motor type | Lead | Stroke | Applicable controller | Cable length | Options |
|---|---|---|---|---|---|---|---|---|
| | RA3C: Coupling Specification<br>RA3D: Built-In Specification<br>RA3R: Motor Reversing Specification | I: Incremental specification | 20: Pulse motor 20W | 10: 10mm<br>5: 5mm<br>2.5: 2.5mm | 50:50mm<br>~<br>300:300mm<br>(Set in 50-mm steps) | A1: ACON<br>ASEL | N: No cable<br>P: 1m<br>S: 3m<br>M: 5m<br>X□□: Specified length<br>R□□: Robot cable | Refer to the options price list below. |

* Refer to p. 31 of the front matter for details on the model specification items.

**POINT Selection Points**

(1) When the stroke increases, the maximum speed will drop to prevent the ball screw from reaching a critical speed. Use the actuator specification table below to check the maximum speed at the stroke you desire.
(2) The load capacity is based on operation at an acceleration of 0.3 G (or 0.2 G if the lead is 2.5). This is the maximum acceleration.
(3) The horizontal load capacity assumes use of an external guide and absence of external force applied from any direction other than the moving direction of the rod.

## Actuator Specifications

### ■Lead and Load Capacity

| Model | Motor output (W) | Lead (mm) | Maximum load capacity Horizontal (kg) | Maximum load capacity Vertical (kg) | Rated thrust (N) | Stroke (mm) |
|---|---|---|---|---|---|---|
| RCAW-①-I-20-10-②-A1-③-④ | 20 | 10 | 4 | 1.5 | 36.2 | 50 ~ 200 (Set in 100-mm steps) |
| RCAW-①-I-20-5-②-A1-③-④ | | 5 | 9 | 3 | 72.4 | |
| RCAW-①-I-20-2.5-②-A1-③-④ | | 2.5 | 18 | 6.5 | 144.8 | |

Explanation of numbers ① Type ② Stroke ③ Cable length ④ Options

### ■Stroke and Maximum Speed

| Lead \ Stroke | 50 ~ 200 (Set in 50-mm steps) |
|---|---|
| 10 | 500 |
| 5 | 250 |
| 2.5 | 125 |

(Unit: mm/s)

## Actuator Specifications

| Item | Description |
|---|---|
| Drive method | Ball screw ø8mm, rolled C10 |
| Positioning repeatability | ±0.02mm |
| Backlash | 0.05mm or less |
| Base | Material: Aluminum with white alumite treatment |
| Rod diameter | ø16mm |
| Rod non-rotation accuracy | ±1.0° |
| Ambient operating temperature, humidity | 0~40°C, 85% RH or below (non-condensing) |

## Dimensions

You can download CAD drawings from our website. www.iai-robot.co.jp

2D CAD

*1 Connect the motor/encoder cables. Refer to p. 324 for details on the cables.
*2 The slider moves to the ME during home return. Pay attention to prevent contact between the slider and surrounding parts.
ME: Mechanical end SE: Stroke end

[RA3C/RA3D]

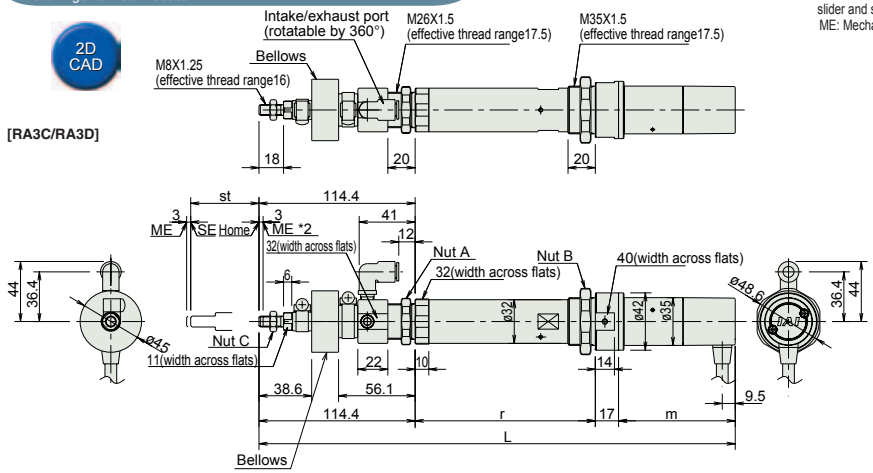


[RA3R]

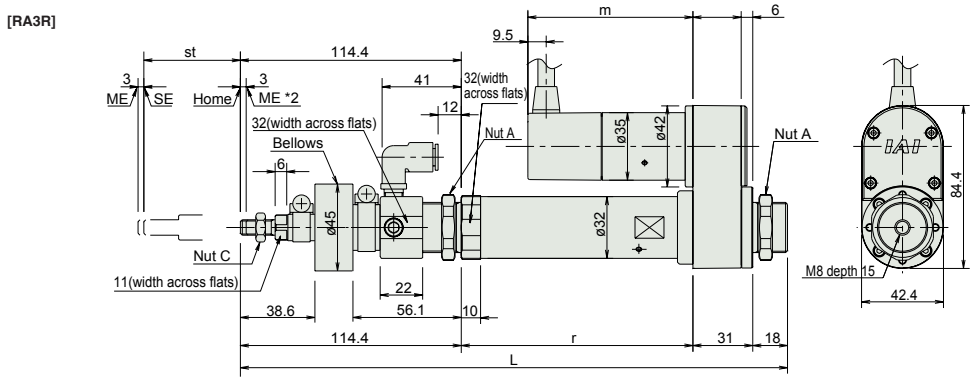


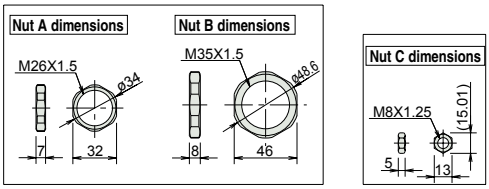


### Dimensions and Weight by Stroke

**RCAW-RA3C-RA3D/RA3R (without brake)**

| Stroke | | 50 | 100 | 150 | 200 |
|---|---|---|---|---|---|
| L | RA3C | 348.9 | 398.9 | 448.9 | 498.9 |
| | RA3D | 329.9 | 379.9 | 429.9 | 479.9 |
| | RA3R | 283.4 | 333.4 | 383.4 | 433.4 |
| ℓ | RA3C | 132 | 182 | 232 | 282 |
| | RA3D | 132 | 182 | 232 | 282 |
| | RA3R | 120 | 170 | 220 | 270 |
| m | RA3C | 85.5 | | | |
| | RA3D | 66.5 | | | |
| | RA3R | 85.5 | | | |
| Weight (kg) | RA3C | 1.0 | 1.1 | 1.2 | 1.3 |
| | RA3D | 1.0 | 1.1 | 1.2 | 1.3 |
| | RA3R | 1.1 | 1.2 | 1.3 | 1.4 |

**RCAW-RA3C-RA3D/RA3R (with brake)**

| Stroke | | 50 | 100 | 150 | 200 |
|---|---|---|---|---|---|
| L | RA3C | 387.9 | 437.9 | 487.9 | 537.9 |
| | RA3D | Not available with brake. | | | |
| | RA3R | 283.4 | 333.4 | 383.4 | 433.4 |
| ℓ | RA3C | 132 | 182 | 232 | 282 |
| | RA3D | 132 | 182 | 232 | 282 |
| | RA3R | 120 | 170 | 220 | 270 |
| m | RA3C | 124.5 | | | |
| | RA3D | Not available with brake. | | | |
| | RA3R | 124.5 | | | |
| Weight (kg) | RA3C | 1.2 | 1.3 | 1.4 | 1.5 |
| | RA3D | 1.2 | 1.3 | 1.4 | 1.5 |
| | RA3R | 1.3 | 1.4 | 1.5 | 1.6 |

# Controller

## Applicable Controllers

RCP2 series actuators can be operated using the following controllers. Choose the type that best suits your specific purpose.

| Name | External view | Model | Features | Maximum number of positioning points | Input power supply | Power-supply capacity | Reference page |
|---|---|---|---|---|---|---|---|
| Positioner type | | ACON-C-20I-NP-2-0 | Supporting up to 512 positioning points | 512 points | DC24V | Rating: 1.3A, Peak: 3.7A | →P315 |
| Positioner type meeting safety category | | ACON-CG-20I-NP-2-0 | | | | | |
| Solenoid valve type | | ACON-CY-20I-NP-2-0 | Same control actions as those applicable to solenoid valves | 3 points | | | |
| Pulse-train input type (differential line driver specification) | | ACON-PL-20I-NP-2-0 | Pulse-train input type supporting a differential line driver | ( - ) | | | |
| Pulse-train input type (open collector specification) | | ACON-PO-20I-NP-2-0 | Pulse-train input type supporting an open collector | | | | |
| Serial communication type | | ACON-SE-20I-0-0 | Dedicated serial communication type | 64 points | | | |
| Program control type | | ASEL-C-1-20 I -NP-2-0 | Programmable type capable of operating up to 2 axes | 1500 points | | | →P345 |

* The ASEL model name is based on a 1-axis specification.

# RCAW-RA4C/RA4D/RA4R

ROBO Cylinder, Splash-Proof Rod Type, Actuator Diameter ø37mm, 24-V Servo Motor
Coupling Specification//Built-In Specification/Motor Reversing Specification

■Model Specification Items **RCAW** — □ — □ — □ — □ — □ — **A1** — □ — □

| Series | Type | Encoder type | Motor type | Lead | Stroke | Applicable controller | Cable length | Options |
|---|---|---|---|---|---|---|---|---|
| | RA4C: Coupling Specification<br>RA4D: Built-In Specification<br>RA4R: Motor Reversing Specification | I: Incremental specification<br>A: Absolute specification | 20: Pulse motor 20W<br>30: Pulse motor 30W | 12: 12mm<br>6: 6mm<br>3: 3mm | 50:50mm<br>~<br>300:300mm<br>(Set in 50-mm steps) | A1: ACON<br>ASEL | N: No cable<br>P: 1m<br>S: 3m<br>M: 5m<br>X□□: Specified length<br>R□□: Robot cable | Refer to the options price list below. |

* Refer to p. 31 of the front matter for details on the model specification items.

**POINT Selection Points**

(1) When the stroke increases, the maximum speed will drop to prevent the ball screw from reaching a critical speed. Use the actuator specification table below to check the maximum speed at the stroke you desire.
(2) The load capacity is based on operation at an acceleration of 0.3 G (or 0.2 G if the lead is 3). This is the maximum acceleration.
(3) The horizontal load capacity assumes use of an external guide and absence of external force applied from any direction other than the moving direction of the rod.

## Actuator Specifications

### ■Lead and Load Capacity

| Model | Motor output (W) | Lead (mm) | Maximum load capacity Horizontal (kg) | Maximum load capacity Vertical (kg) | Rated thrust (N) | Stroke (mm) |
|---|---|---|---|---|---|---|
| RCAW-①-②-20-12-③-④-⑤-⑥ | 20 | 12 | 3.0 | 1.0 | 18.9 | 50 ~ 300 (Set in 100-mm steps) |
| RCAW-①-②-20-6-③-④-⑤-⑥ | | 6 | 6.0 | 2.0 | 37.7 | |
| RCAW-①-②-20-3-③-④-⑤-⑥ | | 3 | 12.0 | 4.0 | 75.4 | |
| RCAW-①-②-30-12-③-④-⑤-⑥ | 30 | 12 | 4.0 | 1.5 | 28.3 | |
| RCAW-①-②-30-6-③-④-⑤-⑥ | | 6 | 9.0 | 3.0 | 56.6 | |
| RCAW-①-②-30-3-③-④-⑤-⑥ | | 3 | 18.0 | 6.5 | 113.1 | |

Explanation of numbers ① Type ② Encoder type ③ Stroke ④ Applicable controller ⑤ Cable length ⑥ Options

### ■Stroke and Maximum Speed

| Lead \ Stroke | 50 ~ 300 (Set in 50-mm steps) |
|---|---|
| 12 | 600 |
| 6 | 300 |
| 3 | 150 |

(Unit: mm/s)

## Actuator Specifications

| Item | Description |
|---|---|
| Drive method | Ball screw ø10mm, rolled C10 |
| Positioning repeatability | ±0.02mm |
| Backlash | 0.05mm or less |
| Base | Material: Aluminum with white alumite treatment |
| Rod diameter | ø20mm |
| Rod non-rotation accuracy | ±1.0° |
| Ambient operating temperature, humidity | 0~40°C, 85% RH or below (non-condensing) |

## Dimensions

You can download CAD drawings from our website. www.iai-robot.co.jp

2D CAD

*1 Connect the motor/encoder cables. Refer to p. 324 for details on the cables.
*2 The slider moves to the ME during home return. Pay attention to prevent contact between the slider and surrounding parts.
ME: Mechanical end SE: Stroke end

### [RA4C / RA4D]

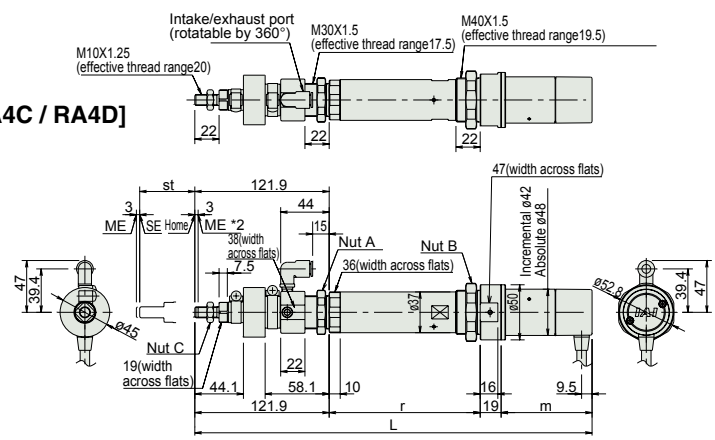


### [RA4R]

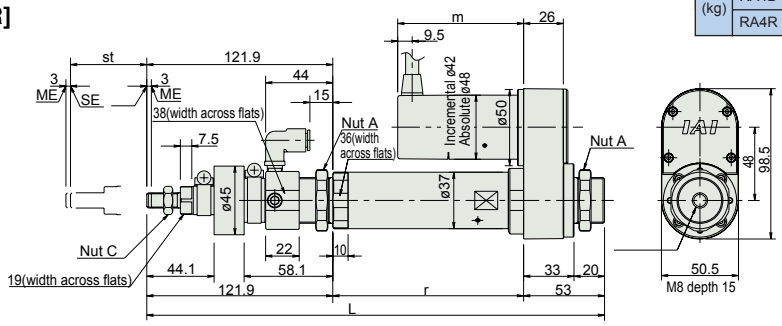


### Dimensions and Weight by Stroke

RCAW-RA4C-RA4D/RA4R (without brake)

| Stroke | | | | 50 | 100 | 150 | 200 | 250 | 300 |
|---|---|---|---|---|---|---|---|---|---|
| L | RA4C | 20W | Incremental | 345.4 | 395.4 | 445.4 | 495.4 | 545.4 | 595.4 |
| | | | Absolute | 358.4 | 408.4 | 458.4 | 508.4 | 558.4 | 608.4 |
| | | 30W | Incremental | 360.4 | 410.4 | 460.4 | 510.4 | 560.4 | 610.4 |
| | | | Absolute | 373.4 | 423.4 | 473.4 | 523.4 | 573.4 | 623.4 |
| | RA4D | 20W | Incremental | 323.4 | 373.4 | 423.4 | 473.4 | 523.4 | 573.4 |
| | | | Absolute | 336.4 | 386.4 | 436.4 | 486.4 | 536.4 | 586.4 |
| | | 30W | Incremental | 338.4 | 388.4 | 438.4 | 488.4 | 538.4 | 588.4 |
| | | | Absolute | 351.4 | 401.4 | 451.4 | 501.4 | 551.4 | 601.4 |
| | RA4R | 20W | Incremental | 299.9 | 349.9 | 399.9 | 449.9 | 499.9 | 549.9 |
| | | | Absolute | 299.9 | 349.9 | 399.9 | 449.9 | 499.9 | 549.9 |
| | | 30W | Incremental | 299.9 | 349.9 | 399.9 | 449.9 | 499.9 | 549.9 |
| | | | Absolute | 299.9 | 349.9 | 399.9 | 449.9 | 499.9 | 549.9 |
| ℓ | RA4C | 20W | Incremental /Absolute | 137 | 187 | 237 | 287 | 337 | 387 |
| | | 30W | | 137 | 187 | 237 | 287 | 337 | 387 |
| | RA4D | 20W | | 137 | 187 | 237 | 287 | 337 | 387 |
| | | 30W | | 137 | 187 | 237 | 287 | 337 | 387 |
| | RA4R | 20W | | 125 | 175 | 225 | 275 | 325 | 375 |
| | | 30W | | 125 | 175 | 225 | 275 | 325 | 375 |
| m | RA4C | 20W | Incremental | 67.5 | | | | | |
| | | | Absolute | 80.5 | | | | | |
| | | 30W | Incremental | 82.5 | | | | | |
| | | | Absolute | 96.5 | | | | | |
| | RA4D | 20W | Incremental | 45.5 | | | | | |
| | | | Absolute | 58.5 | | | | | |
| | | 30W | Incremental | 60.5 | | | | | |
| | | | Absolute | 73.5 | | | | | |
| | RA4R | 20W | Incremental | 67.5 | | | | | |
| | | | Absolute | 80.5 | | | | | |
| | | 30W | Incremental | 82.5 | | | | | |
| | | | Absolute | 95.5 | | | | | |
| Weight (kg) | RA4C | 20W/30W | | 1.4 | 1.5 | 1.7 | 1.8 | 2.0 | 2.1 |
| | RA4D | 20W/30W | | 1.3 | 1.5 | 1.6 | 1.8 | 1.9 | 2.1 |
| | RA4R | 20W/30W | | 1.5 | 1.7 | 1.8 | 2.0 | 2.1 | 2.3 |

* The RA4C type has its overall length extended by 43 mm when a brake is added. With the RA4R type with brake, the motor length is extended by 43 mm, but the overall length remains unchanged due to the motor reversing specification. The brake setting is not available with the RA4D type. The weight increases by 0.2 kg with all models with brake.

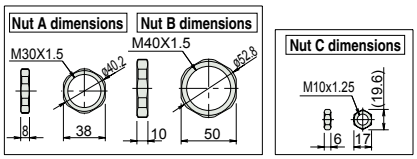


## Controller

### Applicable Controllers

RCP2 series actuators can be operated using the following controllers. Choose the type that best suits your specific purpose.

| Name | External view | Model | Features | Maximum number of positioning points | Input power supply | Power-supply capacity | Reference page |
|---|---|---|---|---|---|---|---|
| Positioner type | | ACON-C-20I-NP-2-0 | Supporting up to 512 positioning points | 512 points | DC24V | Rating: 1.3A, Peak: 3.7A | →P315 |
| Positioner type meeting safety category | | ACON-CG-20I-NP-2-0 | | | | | |
| Solenoid valve type | | ACON-CY-20I-NP-2-0 | Same control actions as those applicable to solenoid valves | 3 points | | | |
| Pulse-train input type (differential line driver specification) | | ACON-PL-20I-NP-2-0 | Pulse-train input type supporting a differential line driver | ( - ) | | | |
| Pulse-train input type (open collector specification) | | ACON-PO-20I-NP-2-0 | Pulse-train input type supporting an open collector | | | | |
| Serial communication type | | ACON-SE-20I-0-0 | Dedicated serial communication type | 64 points | | | |
| Program control type | | ASEL-C-1-20 I -NP-2-0 | Programmable type capable of operating up to 2 axes | 1500 points | | | →P345 |

* The ASEL model name is based on a 1-axis specification.
* ① indicates the encoder type (I: Incremental / A: Absolute).

ROBO CYLINDER

# Controller

## ASEL

## ACON

# ACON

## ■ Model C / CG / CY / PL / PO / SE

Position controller
for RCA series

## Type List

Position controller capable of operating RCP2 series actuator. Select from five types each supporting a different control mode.

| Type | C | CG | CY | PL / PO | SE |
|---|---|---|---|---|---|
| Name | Positioner type | Safety category type | Solenoid valve type | Pulse-train control type | Serial communication type |
| External view | | | | | |
| Description | Positioner supporting up to 512 positioning points | C type conforming to safety category | Same control actions as those used on air cylinders | Controller for pulse-train control | Network controller |
| Number of position points | 512 points | 512 points | 3 points | (Unlimited) | 64 points |
| | — | — | — | — | — |

## Model

**ACON** — [ ] — [ ] **I** — [ ] — [ ] — **0**

Series — Type — Motor type — Encoder type — Standard I/O — I/O cable length — Power-supply voltage

| | |
|---|---|
| C | Positioner type |
| CG | Safety category type |
| CY | Solenoid valve type |
| SE | Serial communication type |
| PL | Pulse-train control type (differential receiver type) |
| PO | Pulse-train control type (open collector type) |

| | |
|---|---|
| 20S | 20-W motor (RA3 only) |
| 20 | 20-W motor (other than RA3) |
| 30 | 30-W motor |

| | |
|---|---|
| I | Incremental |

| | |
|---|---|
| NP | NPN specification (standard) |
| PN | PNP specification |
| N | No I/O (SE type) |

* If SE (serial communication type) is specified, "0" is automatically specified for the I/O cable option (no cable).

| | |
|---|---|
| 0 | No cable |
| 2 | 2m |
| 3 | 3m |
| 5 | 4m |

| | |
|---|---|
| 0 | DC24V |

## System Configuration

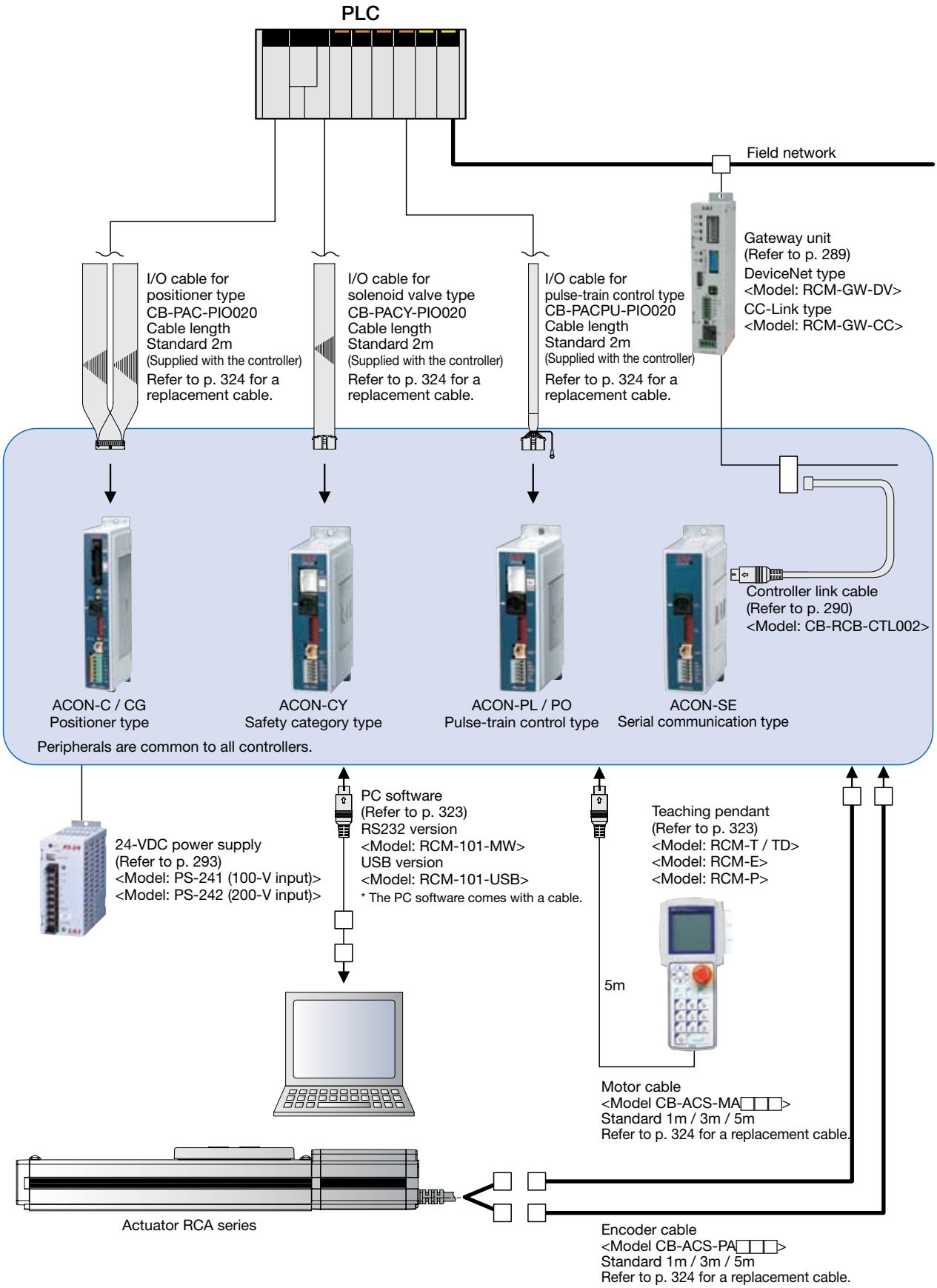

## I/O

### ■ Input Part External input specifications

| Item | Specification |
|---|---|
| Input voltage | 24VDC ± 10% |
| Input current | 4mA/circuit |
| Leak current | 1mA max./point |
| Insulation method | Photocoupler |

### ■ Output Part External output specifications

| Item | Specification |
|---|---|
| Load voltage | DC24V |
| Maximum load current | 50mA/point |
| Residual voltage | 2V max. |
| Insulation method | Photocoupler |

NPN specification

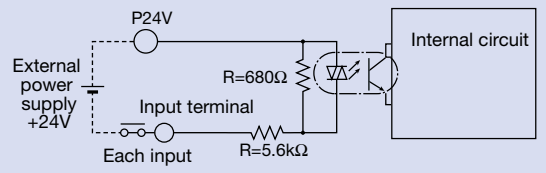


NPN specification

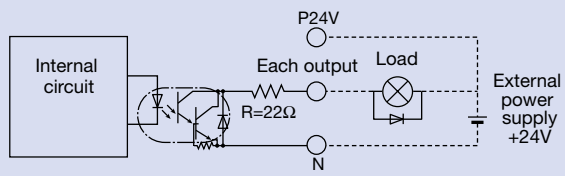


PNP specification

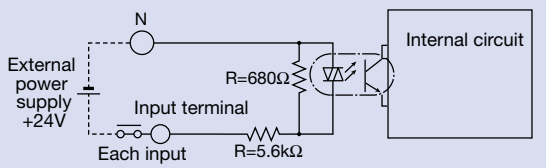


PNP specification

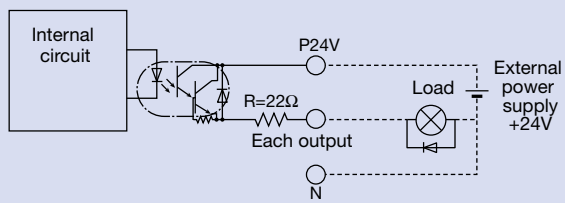


## I/O Specifications

The four controller types (C/CG, CY, PL/PO and SE) are differentiated by their I/O specifications. Since the positioner type and solenoid valve type allow the I/O signal settings to be changed through the controller, multiple functions can be provided for selection as needed.

### ■ Controller Functions by Type

| Type | C / CG | CY | PL / PO | SE | Features |
|---|---|---|---|---|---|
| Name | Positioner type | Solenoid valve type | Pulse-train control type | Serial communication type | |
| Positioner mode | ○ | ○ | × | × | A basic operation mode in which the actuator is operated by specifying a position number and then inputting a start signal. |
| Teaching mode | ○ | × | × | × | In this mode, the slider (rod) can be moved by means of an external signal to store the achieved position as position data. |
| Solenoid valve mode | ○ | ○ | × | × | The actuator can be moved simply by ON/OFF of position number signals. This mode makes it easy to convert applications previously using air cylinders with solenoid valves. |
| Pulse train mode | × | × | ○ | × | You can operate the actuator freely according to your control needs, without inputting position data. |
| Network support | ○ | ○ | × | ○ | The controller can be connected to a network via a gateway unit and serial communication function. |

## Explanation of I/O Signal Functions

The table below explains the functions assigned to the respective I/O signals of the controller.
Since the signals that can be used vary depending on the controller type and settings, check the signal table for each controller to confirm the available functions.

### ■ Controller Functions by Type

| Category | Abbreviation | Signal name | Function description |
|---|---|---|---|
| Input | CSTR | PTP strobe signal (start signal) | Input this signal to cause the actuator to start moving to the position set by the command position number signal. |
| | PC1~PC256 | Command position number signal | This signal is used to input a target position number (binary input). |
| | BKRL | Brake forced-release signal | This signal forcibly releases the brake. |
| | RMOD | Running mode switching signal | This signal can switch the running mode when the MODE switch on the controller is set to AUTO (AUTO when this signal is OFF, or MANU when the signal is ON). |
| | * STP | Pause signal | Turning this signal OFF causes the moving actuator to decelerate to a stop. The actuator will resume the remaining movement if the signal is turned OFF during the pause. |
| | RES | Reset signal | Turning this signal ON resets the alarms that are present. If this signal is turned ON while the actuator is paused (*STP is OFF), the remaining movement can be cancelled. |
| | SON | Servo ON signal | The servo remains on while this signal is ON, or off while the signal is OFF. |
| | HOME | Home return signal | Turning this signal ON performs home-return operation. |
| | MODE | Teaching mode signal | Turning this signal ON switches the controller to the teaching mode (provided that CSTR, JOG+ and JOG- are all OFF and the actuator is not moving). |
| | JISL | Jog/inching switching signal | The actuator can be jogged with JOG+ and JOG- while this signal is OFF. The actuator performs inching operation with JOG+ and JOG- while this signal is ON. |
| | JOG+ JOG– | ------ | ---- |
| | PWRT | Teaching signal | In the teaching mode, specify a desired position number and then turn this signal ON for at least 20 ms to write the current position under the specified position number. |
| | ST0~ST6 | Start position command | Turning this signal ON in the solenoid valve mode causes the actuator to move to the specified position. (Start signal is not required.) |
| | TL | Torque limit selection signal | While this signal is ON, torque is limited by the value set by a parameter. The TLR signal turns ON if torque has reached the specified value. |
| | DCLR | Deviation counter clear signal | The position deviation counter is continuously cleared while this signal is ON. |
| Output | PEND/INP | Position complete signal | This signal turns ON when the actuator has entered the positioning band after movement. If the actuator has exceeded the positioning band, PEND does not turn OFF, but INP does. PEND and INP can be swapped using a parameter. |
| | PM1~PM256 | Completed position number signal | This signal is used to output the position number achieved at completion of positioning (binary output). |
| | HEND | Home return complete signal | This signal turns ON upon completion of home return. |
| | ZONE1 | Zone signal | This signal turns ON when the current actuator position has entered the range specified by parameters. |
| | PZONE | Position zone signal | This signal turns ON when the current actuator position has entered the range specified by position data during position movement. PZONE can be used together with ZONE1, but PZONE is valid only during movement to a specified position. |
| | RMDS | Running mode status signal | This signal is used to output the running mode status. |
| | * ALM | Controller alarm status signal | This signal remains ON while the controller is normal, and turns OFF if an alarm has generated. |
| | MOVE | Moving signal | This signal remains ON while the actuator is moving (including the periods during home return and push-motion operation). |
| | SV | Servo ON status signal | This signal remains ON while the servo is on. |
| | * EMGS | Emergency stop status signal | This signal remains ON while the controller is not in the emergency stop mode, and turns OFF once an emergency stop has been actuated. |
| | MODES | Mode status signal | This signal turns ON when the controller has switched to the teaching mode via MODE signal input. It turns OFF upon returning to the normal mode. |
| | WEND | Write complete signal | This signal remains OFF after the controller has switched to the teaching mode. It turns ON upon completion of data write using the PWRT signal. If the PWRT signal is turned OFF, this signal also turns OFF. |
| | PE0~PE6 | Current position number signal | This signal turns ON after the controller has completed moving to the target position in the solenoid valve mode. |
| | TLR | Torque limiting signal | This signal turns ON once the motor torque has reached the specified value in a condition where torque is being limited by the TL signal. |
| | LSO~LS2 | Limit switch output signal | Each signal turns ON when the current actuator position has entered the positioning band before or after the target position. If the actuator has already completed home return, these signals are output even before a movement command is issued or while the servo is OFF. |
| | TRQS | --- | -------- |

## I/O Signal Table

### ■ Positioner type (ACON-C / CG)

| Pin number | Category | | Parameter (PIO pattern) selection | | | | | |
|---|---|---|---|---|---|---|---|---|
| | | | 0 | 1 | 2 | 3 | 4 | 5 |
| | | | Positioning mode | Teaching mode | 256-point mode | 512-point mode | Solenoid valve mode 1 | Solenoid valve mode 2 |
| | | Number of positioning points | 64 points | 64 points | 256 points | 512 points | 7 points | 3 points |
| | | Zone signal | ○ | × | × | × | ○ | ○ |
| | | P zone signal | ○ | ○ | ○ | × | ○ | ○ |
| 1A | 24V | | P24 | | | | | |
| 2A | 24V | | P24 | | | | | |
| 3A | – | | NC | | | | | |
| 4A | – | | NC | | | | | |
| 5A | Input | IN0 | PC1 | PC1 | PC1 | PC1 | ST0 | ST0 |
| 6A | | IN1 | PC2 | PC2 | PC2 | PC2 | ST1 | ST1 (JOG+) |
| 7A | | IN2 | PC4 | PC4 | PC4 | PC4 | ST2 | ST2 (–) |
| 8A | | IN3 | PC8 | PC8 | PC8 | PC8 | ST3 | – |
| 9A | | IN4 | PC16 | PC16 | PC16 | PC16 | ST4 | – |
| 10A | | IN5 | PC32 | PC32 | PC32 | PC32 | ST5 | – |
| 11A | | IN6 | – | MODE | PC64 | PC64 | ST6 | – |
| 12A | | IN7 | – | JISL | PC128 | PC128 | – | – |
| 13A | | IN8 | – | JOG+ | – | PC256 | – | – |
| 14A | | IN9 | BKRL | JOG- | BKRL | BKRL | BKRL | BKRL |
| 15A | | IN10 | RMOD | RMOD | RMOD | RMOD | RMOD | RMOD |
| 16A | | IN11 | HOME | HOME | HOME | HOME | HOME | – |
| 17A | | IN12 | * STP | * STP | * STP | * STP | * STP | – |
| 18A | | IN13 | CSTR | CSTR/PWRT | CSTR | CSTR | – | – |
| 19A | | IN14 | RES | RES | RES | RES | RES | RES |
| 20A | | IN15 | SON | SON | SON | SON | SON | SON |
| 1B | Output | OUT0 | PM1 | PM1 | PM1 | PM1 | PE0 | LSO |
| 2B | | OUT1 | PM2 | PM2 | PM2 | PM2 | PE1 | LS1 (TRQS) |
| 3B | | OUT2 | PM4 | PM4 | PM4 | PM4 | PE2 | LS2(–) |
| 4B | | OUT3 | PM8 | PM8 | PM8 | PM8 | PE3 | – |
| 5B | | OUT4 | PM16 | PM16 | PM16 | PM16 | PE4 | – |
| 6B | | OUT5 | PM32 | PM32 | PM32 | PM32 | PE5 | – |
| 7B | | OUT6 | MOVE | MOVE | PM64 | PM64 | PE6 | – |
| 8B | | OUT7 | ZONE1 | MODES | PM128 | PM128 | ZONE1 | ZONE1 |
| 9B | | OUT8 | PZONE | PZONE | PZONE | PM256 | PZONE | PZONE |
| 10B | | OUT9 | RMDS | RMDS | RMDS | RMDS | RMDS | RMDS |
| 11B | | OUT10 | HEND | HEND | HEND | HEND | HEND | HEND |
| 12B | | OUT11 | PEND | PEND/WEND | PEND | PEND | PEND | – |
| 13B | | OUT12 | SV | SV | SV | SV | SV | SV |
| 14B | | OUT13 | * EMGS | * EMGS | * EMGS | * EMGS | * EMGS | * EMGS |
| 15B | | OUT14 | * ALM | * ALM | * ALM | * ALM | * ALM | * ALM |
| 16B | | | – | – | – | – | – | – |
| 17B | – | | NC | | | | | |
| 18B | – | | NC | | | | | |
| 19B | 0V | | N | | | | | |
| 20B | 0V | | N | | | | | |

### ■ Solenoid valve type (ACON-CY)

| Pin number | Category | | Parameter (PIO pattern) selection | |
|---|---|---|---|---|
| | | | 0 | 1 |
| | | | Solenoid valve mode 0 | Solenoid valve mode 1 |
| | | Number of positioning points | 3 points | 3 points |
| | | Zone signal | × | × |
| | | P zone signal | × | ○ |
| 1 | 24V | | | |
| 2 | 0V | | | |
| 3 | Input | IN0 | ST0 | ST0 |
| 4 | | IN1 | ST1(JOG) | ST1(JOG) |
| 5 | | IN2 | ST2(–) | ST2(–) |
| 6 | | IN3 | SON | SON |
| 7 | Output | OUT0 | LS0 | PE0 |
| 8 | | OUT1 | LS1(TRQS) | PE1(TRQS) |
| 9 | | OUT2 | LS2(–) | PE2(–) |
| 10 | | OUT3 | SV | PZONE |
| 11 | | OUT4 | HEND | HEND |
| 12 | | OUT5 | * ALM | * ALM |

### ■ Pulse-train type (ACON-PL/PO)

| Pin number | Category | | Parameter (PIO pattern) selection | |
|---|---|---|---|---|
| | | | 0 | 1 |
| | | | Standard mode | Push mode |
| | | Number of positioning points | – | – |
| | | Zone signal | × | × |
| | | P zone signal | × | × |
| 1 | 24V | | | |
| 2 | 0V | | | |
| 3 | Input | IN0 | SON | SON |
| 4 | | IN1 | TL | TL |
| 5 | | IN2 | HOME | HOME |
| 6 | | IN3 | RES | RES/DCLR |
| 7 | Output | OUT0 | SV | SV |
| 8 | | OUT1 | INP | INP/TLR |
| 9 | | OUT2 | HEND | HEND |
| 10 | | OUT3 | * ALM | * ALM |
| 11 | Input | | * PP | * PP |
| 12 | | | PP | PP |
| 13 | | | * NP | * NP |
| 14 | | | NP | NP |

## Wiring Diagram for Pulse-Train Input Type

### ■ Differential Receiver Method (ACON-PL)

| | |
|---|---|
| Maximum input pulse frequency | : MAX 200kpps |
| Cable length | : MAX 10m |

PIO connector

| Pin number | Category | Signal name |
|---|---|---|
| 1 | External 24 V | 24V |
| 2 | External 0 V | 0V |
| 3 | Input | SON |
| 4 | Input | TL |
| 5 | Input | HOME |
| 6 | Input | RES |
| 7 | Output | SV |
| 8 | Output | INP |
| 9 | Output | HEND |
| 10 | Output | * ALM |
| 11 | Differential input | /PP |
| 12 | | PP |
| 13 | | /NP |
| 14 | | NP |

| | |
|---|---|
| Mounting plate | FG |

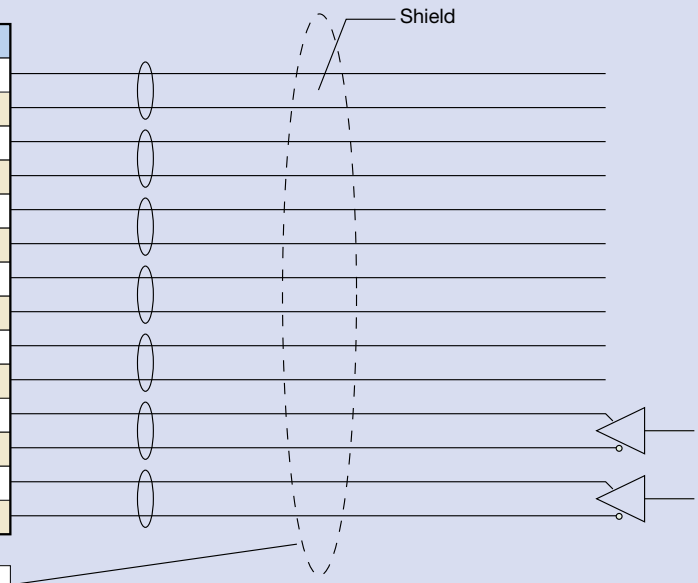


* The shield of the twisted pair cable connected to the PULSE connector must be connected to the mounting plate.

### ■ Open Collector Method (ACON-PO)

| | |
|---|---|
| Maximum input pulse frequency | : MAX 60kpps |
| Cable length | : MAX 2m |

PIO connector

| Pin number | Category | Signal name |
|---|---|---|
| 1 | External 24 V | 24V |
| 2 | External 0 V | 0V |
| 3 | Input | SON |
| 4 | Input | TL |
| 5 | Input | HOME |
| 6 | Input | RES |
| 7 | Output | SV |
| 8 | Output | INP |
| 9 | Output | HEND |
| 10 | Output | * ALM |
| 11 | N.C | /PP |
| 12 | Open collector input | PP |
| 13 | N.C | /NP |
| 14 | Open collector input | NP |

| | |
|---|---|
| Mounting plate | FG |

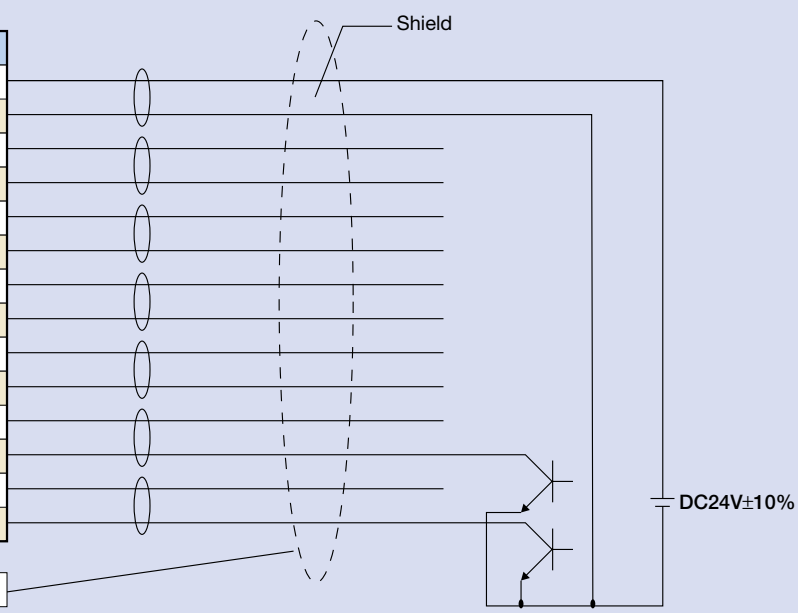


* The shield of the twisted pair cable connected to the PULSE connector must be connected to the mounting plate.
* Connect the external 0-V pin (common) to the ground for controller power.

## Command Pulse Input Patterns

| | Command pulse train pattern | Input terminal | Forward | Reverse |
|---|---|---|---|---|
| Negative logic | Forward pulse train | PP・/PP | | |
| | Reverse pulse train | NP・/NP | | |
| | Forward pulse trains and reverse pulse trains indicate the motor revolutions in forward direction and reverse direction, respectively. | | | |
| | Pulse train | PP・/PP | | |
| | Sign | NP・/NP | Low | High |
| | Command pulses indicate the motor revolutions, while the sign of the command indicates the rotating direction. | | | |
| | Phase-A/B pulse train | PP・/PP | | |
| | | NP・/NP | | |
| | Phase-A/B (x4) pulses with a 90° phase difference specify both the revolutions and rotating direction. | | | |
| Positive logic | Forward pulse train | PP・/PP | | |
| | Reverse pulse train | NP・/NP | | |
| | Pulse train | PP・/PP | | |
| | Sign | NP・/NP | High | Low |
| | Phase-A/B pulse train | PP・/PP | | |
| | | NP・/NP | | |

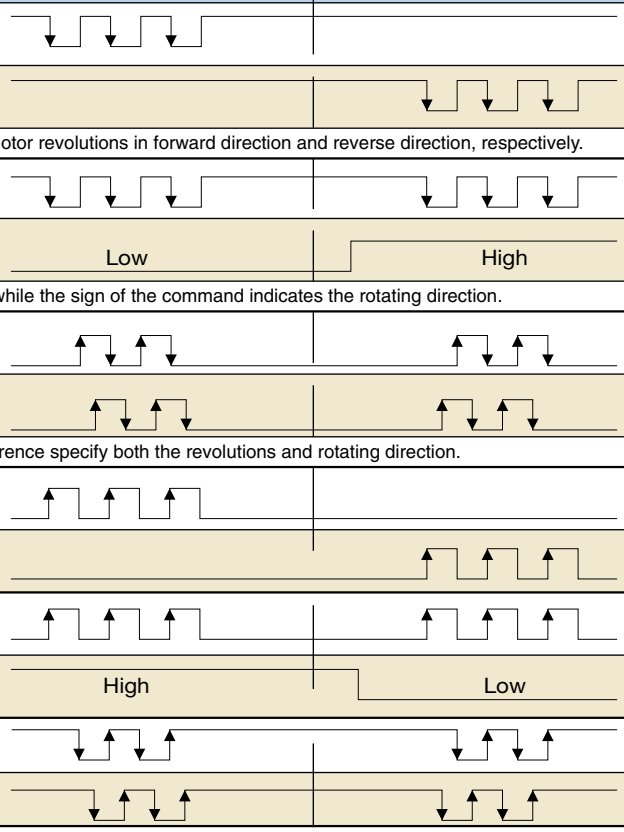

## Specification Table

| Item | Specification | | | | | |
|---|---|---|---|---|---|---|
| Controller type | C | CG | CY | PL | PO | SE |
| Connectable actuators | RCA series actuator | | | | | |
| Number of controlled axes | 1 axis | | | | | |
| Operation method | Positioner type | | Solenoid valve type | Pulse-train control type | | Serial communication type |
| Number of positioning points | 512 points | | 3 points | — | | 64 points |
| Backup memory | EEPROM | | | | | |
| I/O connector | 40-pin connector | | 12-pin connector | 14-pin connector | | None |
| Number of I/O points | 16 input points / 16 output points | | 4 input points / 6 output points | 4 input points / 4 output points | | None |
| I/O power supply | Externally supplied 24VDC ± 10% | | | | | — |
| Serial communication | RS485 1ch | | | | | |
| Peripheral communication cable | CB-PAC-PIO □□□ | | CB-PACY-PIO □□□ | CB-PACPU-PIO □□□ | | CB-RCB-CTL002 |
| Command pulse-train input method | — | | | Differential line driver | Open collector | — |
| Maximum input pulse frequency (Note 1) | — | | | Max 200kpps | Max 60kpps | — |
| Position detection method | Incremental encoder | | | | | |
| Drive-source cutoff relay at emergency stop | Built-in | External | | | | |
| Forced release of electromagnetic brake | Brake release switch ON/OFF | | BK-release terminal signal ON/OFF on power connector | | | |
| Motor cable | CB-ACS-MA □□□ (20m max.) | | | | | |
| Encoder cable | CB-ACS-PA □□□ (20m max.) | | | | | |
| Input power supply | DC24V±10% | | | | | |
| Power-supply capacity | SA4 • SA5 20W (Rating 1.3A / Peak 3.7A)<br>SA6 30W (Rating 1.3A / Peak 4.2A)<br>RA3 20W (Rating 1.7A / Peak 5A)<br>RA4 20W (Rating 1.3A / Peak 3.7A)<br>RA4 30W (Rating 1.3A / Peak 4.2A) | | | | | |
| Dielectric strength voltage | DC500V 1MΩ | | | | | |
| Vibration resistance | XYZ directions | 10~57Hz One-side amplitude 0.035mm (continuous), 0.075mm (intermittent)<br>58~150Hz 4.9m/s2 (continuous), 9.8m/s2 (intermittent) | | | | |
| Ambient operating temperature | 0~40℃ | | | | | |
| Ambient operating humidity | 10~95% (non-condensing) | | | | | |
| Operating ambience | Free from corrosive gases | | | | | |
| Protection class | IP20 | | | | | |
| Weight | Approx. 300g | | Approx. 130g | | | |

(Note 1) With the open collector specification, keep the maximum input frequency to 60 kpps or below to prevent malfunction. Use a differential line driver if 60 kpps is exceeded.

## External Dimensions

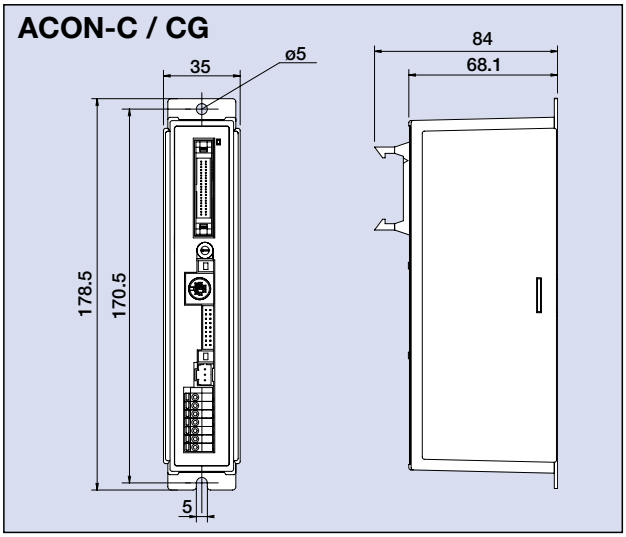


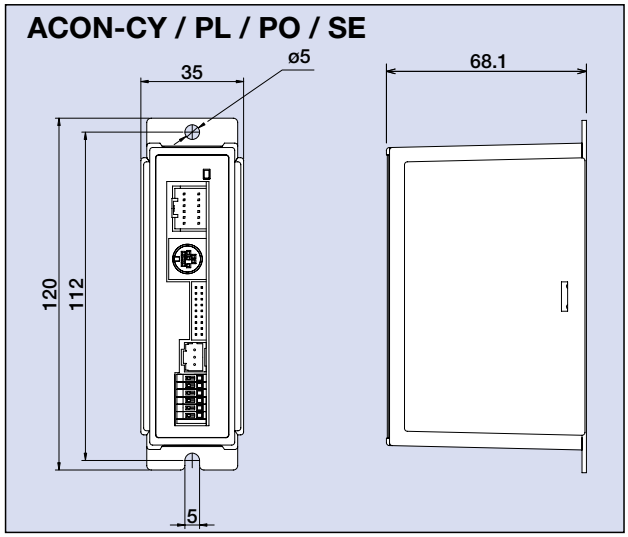


## Name of Each Part

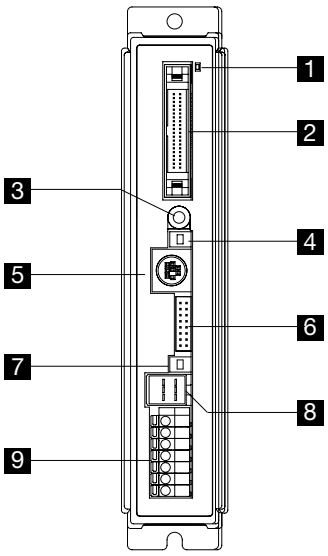


C / CG type

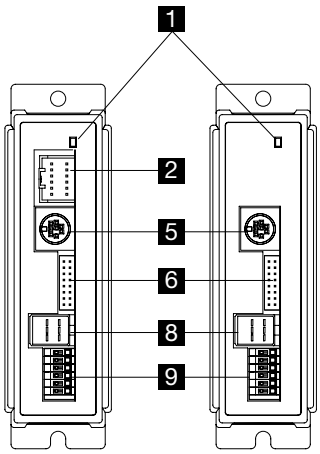


CY / PL / PO type

SE type

* PIO connector pins
CY: 12 pins
PL/PO: 14 pins

Blinking (green) **LED indicators**

These LED indicate the condition of the controller.

Unlit Servo on | Lit (red) Alarm present | Lit (green) Servo off | 1 Automatic servo-off mode

### 2 PIO connector

Connect a cable for communicating with a PLC or other external equipment.

### 3 Address-setting rotary switch

This switch is used to set the address of each controller when multiple controllers are linked.

### 4 Mode switch

This switch is used to switch between teaching operation (MANU) and automatic operation (AUTO).

Operation details

| | |
|---|---|
| MANU | I/O commands are not accepted. Data can be written from a teaching pendant. |
| AUTO | I/O commands are valid, while operations from a teaching pendant are not accepted. Monitoring is possible. |

### 5 SIO connector

Connect a teaching-pendant or PC cable, or a controller to connect to a gateway unit.

Operation details

| Pin number | Signal | Pin | Remarks |
|---|---|---|---|
| 1 | SGA | RS485 differential signal+ | |
| 2 | SGB | RS485 differential signal- | |
| 3 | 5V | +5-V output | For RS232/485 conversion |
| 4 | ENBL | Enable signal | |
| 5 | EMGA | EMG line connection to external equipment | |
| 6 | 24V | 24-V power for T/P | For T/P |
| 7 | 0V | Ground | |
| 8 | EMGB | EMG line connection to external equipment | |
| 9 | 0V | Ground for EMG line connection to external equipment | |

### 6 Encoder/brake connector

Connect the encoder/brake cables of the actuator.

### 7 Brake release switc

A switch to forcibly release the brake

### 8 Motor connector

Connect the motor cable of the actuator.

### 9 Power terminal block

Supplies the main controller power and actuates an emergency stop.

C/CG types

| Pin number | Signal Name | Name |
|---|---|---|
| 7 | S1 | TP_EMG external drive-source cutoff terminal |
| 6 | S2 | |
| 5 | MPI | Motor drive-source cutoff terminal |
| 4 | MPO | Motor drive-source cutoff terminal |
| 3 | 24V | Positive side of the 24-V power supply |
| 2 | 0V | Negative side of the 24-V power supply |
| 1 | EMG | EMG signal (application of 24 V) |

CY / PL / PO / SE types

| Pin number | Signal Name | Name |
|---|---|---|
| 6 | BK | Brake release |
| 5 | MPI | Motor drive-source cutoff terminal |
| 4 | MPO | Motor drive-source cutoff terminal |
| 3 | 24V | Positive side of the 24-V power supply |
| 2 | 0V | Negative side of the 24-V power supply |
| 1 | EMG | EMG signal (application of 24 V) |

# ACON Controller

## Options

### ■ Teaching Pendant

An input device that provides all functions you need for trial operation and adjustment, such as position data input, test operation, as well as monitoring of current axis positions and input/output signals.

| Name | Teaching Pendant | Simple teaching pendant | Data setting unit |
|---|---|---|---|
| Model | RCM-T (standard specification)<br>RCM-TD (with deadman switch *1) | RCM-E | RCM-P |
| Standard price | — | — | — |
| External view | | | |
| Features | A standard, user-friendly teaching pendant equipped with a large LCD screen.<br>A deadman switch type ensuring added safety is also available. | An economical type offering the same functions as the RCA-T at a substantially lower price. | An affordable data setting unit that provides all editing functions other than those relating to axis operation.<br>* This unit does not support operations relating to axis movement. |
| Display | 21 characters x 16 lines on LCD | 16 characters x 2 lines on LCD | 16 characters x 2 lines on LCD |
| Weight | Approx. 550g | Approx. 400g | Approx. 360g |
| Cable length | 5m | 5m | 5m |
| Ambient operating temperature, humidity | Temperature: 0~40°C, Humidity: 85% RH or below | | |
| External dimensions | 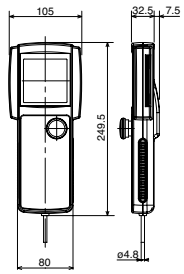 | 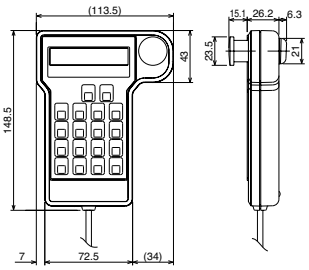 | 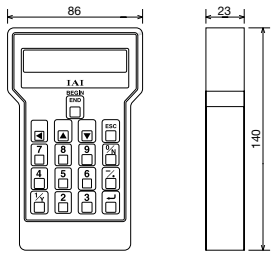 |



*1 The deadman switch is a safety switch that cuts off the drive source when released to disable operation.

### ■ PC Software

A software program that helps input position data and perform test operation.
It significantly facilitates debugging operation by offering wide-ranging functions including jogging, inching, step operation and continuous operation.

### ■ RS232 Communication Type

**Model** RCM-101-MW

<Content>PC software (CD-ROM),
PC cable
(communication cable + RS232 conversion unit)

### ■ USB Communication Type

**Model** RCM-101-USB

<Content>PC software (CD-ROM),
PC cable
(communication cable + USB conversion unit + USB cable)

## Spare Parts

Should you require spare parts after the purchase of your product for replacing the original cables, etc., refer to the model names specified below.

### Motor Cable

Model **CB-ACS-MA□□□**

* □□□ indicates the cable length (L). Lengths up to 20 m can be specified. Example) 080 = 8 m

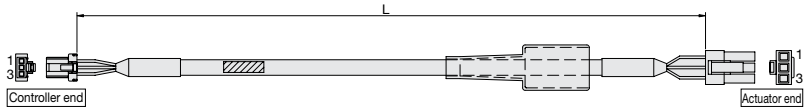


| Wire | Color | Signal | No. |
|---|---|---|---|
| AWG22 (crimped) | 赤 | U | 1 |
| | 白 | V | 2 |
| | 黒 | W | 3 |

| No. | Signal | Color | Wire |
|---|---|---|---|
| 1 | U | 赤 | AWG22 (crimped) |
| 2 | V | 白 | |
| 3 | W | 黒 | |

### Encoder Cable / Encoder Robot Cable

Model **CB-ACS-PA□□□/CB-ACS-PA□□□-RB**

* The standard encoder cable is a normal cable. A robot cable can be specified as an option.

* □□□ indicates the cable length (L). Lengths up to 20 m can be specified. Example) 080 = 8 m

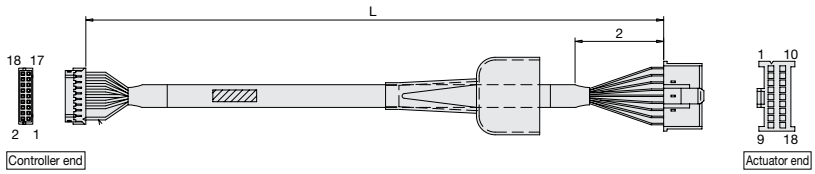


| Wire | Color | Signal | No. |
|---|---|---|---|
| AWG26 (crimped) | 白/紫 | LS+ | 18 |
| | 白/灰 | LS– | 17 |
| | 黄 | BK+ | 16 |
| | 青 | BK– | 15 |
| | 白/青 | A+ | 14 |
| | 白/黄 | A– | 13 |
| | 白/赤 | B+ | 12 |
| | 白/黒 | B– | 11 |
| | ダイダイ | SD/Z+ | 10 |
| | 緑 | SD/Z– | 9 |
| | 紫 | BAT+ | 8 |
| | 灰 | BAT– | 7 |
| | 赤 | VCC | 6 |
| | 黒 | GND | 5 |
| | — | — | 4 |
| | — | — | 3 |
| | — | — | 2 |
| | Drain | FG | 1 |

| No. | Signal ABZ | Signal Serial | Color | Wire |
|---|---|---|---|---|
| 1 | A+ | — | 白/青 | AWG26 (crimped) |
| 2 | A– | — | 白/黄 | |
| 3 | B+ | — | 白/赤 | |
| 4 | B– | — | 白/黒 | |
| 5 | — | — | — | |
| 6 | — | — | — | |
| 7 | LS+ | LS+ | 白/紫 | |
| 8 | — | — | — | |
| 9 | FG | FG | Drain | |
| 10 | Z+ | SD+ | ダイダイ | |
| 11 | Z– | SD– | 緑 | |
| 12 | — | BAT+ | 紫 | |
| 13 | /PS | BAT– | 灰 | |
| 14 | VCC | VCC | 赤 | |
| 15 | GND | GND | 黒 | |
| 16 | LS– | LS– | 白/灰 | |
| 17 | BK– | BK– | 青 | |
| 18 | BK+ | BK+ | 黄 | |

("White/blue" and other designations under "Wire color" indicate the band color/insulator color.)

### I/O Cable for Positioner Type (ACON-C/CG)

Model **CB-PAC-PIO□□□**

* □□□ indicates the cable length (L). Lengths up to 20 m can be specified. Example) 080 = 8 m

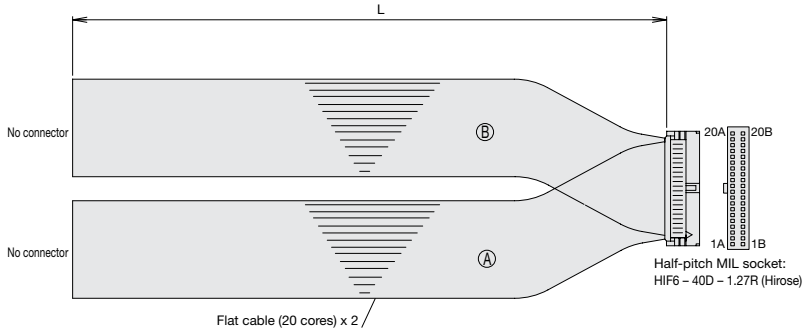


HIF6 – 40D – 1.27R

| No. | Signal name | Cable color | Wire |
|---|---|---|---|
| 1A | 24V | 茶－1 | Flat cable Ⓐ (pressure-welded) |
| 2A | 24V | 赤－1 | |
| 3A | — | 橙－1 | |
| 4A | — | 黄－1 | |
| 5A | IN0 | 緑－1 | |
| 6A | IN1 | 青－1 | |
| 7A | IN2 | 紫－1 | |
| 8A | IN3 | 灰－1 | |
| 9A | IN4 | 白－1 | |
| 10A | IN5 | 黒－1 | |
| 11A | IN6 | 茶－2 | |
| 12A | IN7 | 赤－2 | |
| 13A | IN8 | 橙－2 | |
| 14A | IN9 | 黄－2 | |
| 15A | IN10 | 緑－2 | |
| 16A | IN11 | 青－2 | |
| 17A | IN12 | 紫－2 | |
| 18A | IN13 | 灰－2 | |
| 19A | IN14 | 白－2 | |
| 20A | IN15 | 黒－2 | |

| No. | Signal name | Cable color | Wire |
|---|---|---|---|
| 1B | OUT0 | 茶－3 | Flat cable Ⓑ (pressure-welded) AWG28 |
| 2B | OUT1 | 赤－3 | |
| 3B | OUT2 | 橙－3 | |
| 4B | OUT3 | 黄－3 | |
| 5B | OUT4 | 緑－3 | |
| 6B | OUT5 | 青－3 | |
| 7B | OUT6 | 紫－3 | |
| 8B | OUT7 | 灰－3 | |
| 9B | OUT8 | 白－3 | |
| 10B | OUT9 | 黒－3 | |
| 11B | OUT10 | 茶－4 | |
| 12B | OUT11 | 赤－4 | |
| 13B | OUT12 | 橙－4 | |
| 14B | OUT13 | 黄－4 | |
| 15B | OUT14 | 緑－4 | |
| 16B | OUT15 | 青－4 | |
| 17B | — | 紫－4 | |
| 18B | — | 灰－4 | |
| 19B | 0V | 白－4 | |
| 20B | 0V | 黒－4 | |

### I/O Cable for Solenoid Valve Type (ACON-CY)

Model **CB-PACY-PIO□□□**

* □□□ indicates the cable length (L). Lengths up to 20 m can be specified. Example) 080 = 8 m

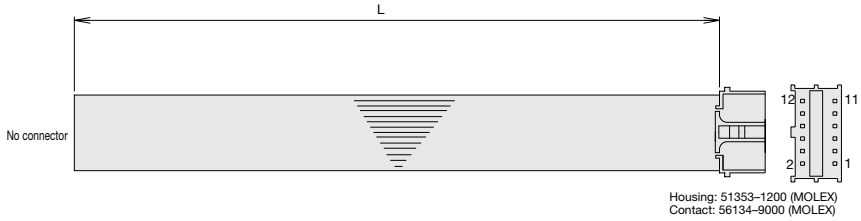


51353-1200 (MOLEX)

| No. | Signal name | Cable color | Wire |
|---|---|---|---|
| 1 | 24V | 茶－1 | Flat cable (pressure-welded) AWG28 |
| 2 | 0V | 赤－1 | |
| 3 | IN0 | 橙－1 | |
| 4 | IN1 | 黄－1 | |
| 5 | IN2 | 緑－1 | |
| 6 | IN3 | 青－1 | |
| 7 | OUT0 | 紫－1 | |
| 8 | OUT1 | 灰－1 | |
| 9 | OUT2 | 白－1 | |
| 10 | OUT3 | 黒－1 | |
| 11 | OUT4 | 茶－2 | |
| 12 | OUT5 | 赤－2 | |

### I/O Cable for Pulse-Train Control Type (ACON-PL/PO)

Model **CB-PACPU-PIO□□□**

* □□□ indicates the cable length (L). Lengths up to 20 m can be specified. Example) 080 = 8 m

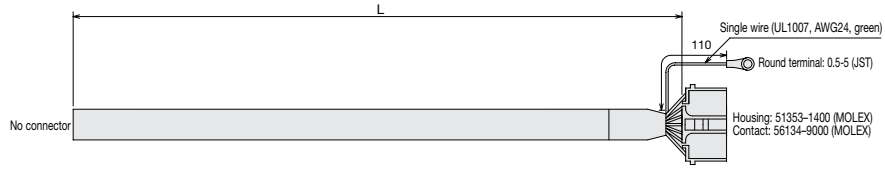


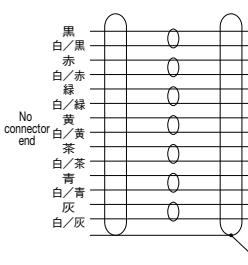


51353-1400 (MOLEX)

| No. | Signal name | Cable color | Wire |
|---|---|---|---|
| 1 | IO_24V | 黒 | 0.2sq |
| 2 | IO_24G | 白／黒 | |
| 3 | IN0 | 赤 | |
| 4 | IN1 | 白／赤 | |
| 5 | IN2 | 緑 | |
| 6 | IN3 | 白／緑 | |
| 7 | OUT0 | 黄 | |
| 8 | OUT1 | 白／黄 | |
| 9 | OUT2 | 茶 | |
| 10 | OUT3 | 白／茶 | |
| 11 | PP | 青 | |
| 12 | PG | 白／青 | |
| 13 | NP | 灰 | |
| 14 | NG | 白／灰 | |

0.5-5 (JST)

| | | | |
|---|---|---|---|
| 1 | FG | 白／灰 | AWG24 |

# ASEL

Position controller for RCA series
Program controller

## Type List

Program controller capable of operating RCA series actuator. Various control functions are combined into a single unit.

| Type | C | |
|---|---|---|
| Name | Program mode | Positioner mode |
| External view | | |
| Description | Both actuator operation and communication with external equipment can be handled by a single controller. When two axes are connected, arc interpolation and path operation can be performed. | Up to 1,500 positioning points are supported. Push-motion operation and teaching operation are also possible. |
| Number of position points | 1500 | |

## Model

* With a 1-axis specification, the section denoted by (Axis 2) need not be specified.

ASEL – C – [ ] – [ ] [ ] [ ] – ( [ ] [ ] [ ] ) – [ ] – [ ] – 0

Series | Type | Number of connected axes | Motor type | Encoder type | Option | (1-axis) | Motor type | Encoder type | Option | (Axes 2) | I/O type | I/O cable length | Power-supply voltage

| | |
|---|---|
| C | Standard type |

| | |
|---|---|
| 1 | 1-axis specification |
| 2 | 2-axes specification |

| | |
|---|---|
| I | Incremental |
| A | Absolute |

| | |
|---|---|
| 20S | 20-W motor (RA3 only) |
| 20 | 20-W motor (other than RA3) |
| 30 | 30-W motor |

| | |
|---|---|
| B | Brake |
| H | Home sensor type |

| | |
|---|---|
| I | Incremental |
| A | Absolute |

| | |
|---|---|
| 20S | 20-W motor (RA3 only) |
| 20 | 20-W motor (other than RA3) |
| 30 | 30-W motor |

| | |
|---|---|
| B | Brake |
| H | Home sensor type |

| | |
|---|---|
| NP | PIO NPN specification (standard) |
| PN | PIO PNP specification |

| | |
|---|---|
| 0 | No cable |
| 2 | 2m |
| 3 | 3m |
| 5 | 5m |

| | |
|---|---|
| 0 | DC24V |

## System Configuration

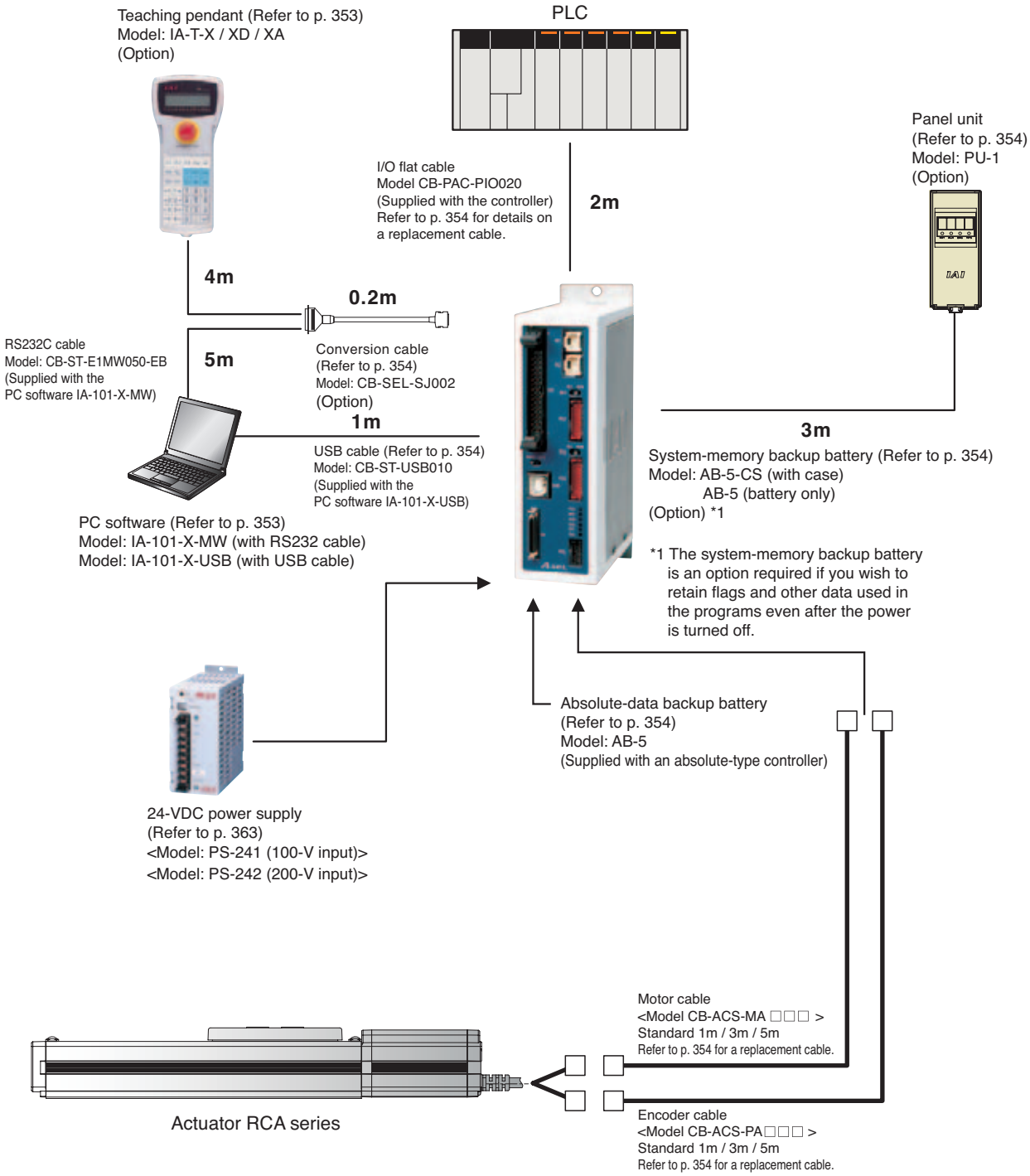

## I/O Specifications

### ■Input Part External input specifications

| Item | Specification |
|---|---|
| Input voltage | DC24V ± 10% |
| Input current | 7mA/1circuit |
| ON/OFF voltage | ON voltage (Min.) NPN:DC16V/PNP:DC8V<br>OFF voltage (Max.) NPN:DC5V/PNP:DC19V |
| Insulation method | Photocoupler |

### ■ Output Part External output specifications.

| Item | Specification |
|---|---|
| Load voltage | DC24V |
| Max. load current | 1mA/point 400mA/8point total |
| Leak current | Max. 0.1mA/1point |
| Insulation method | Photocoupler |

NPN specification

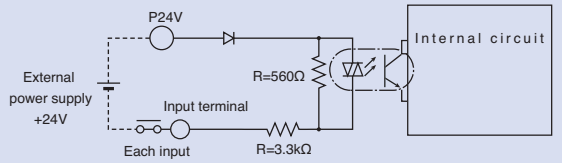


NPN specification

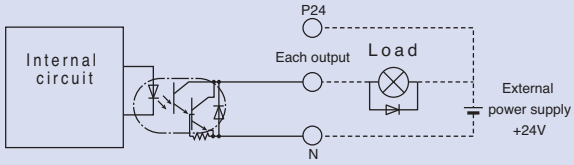


PNP specification

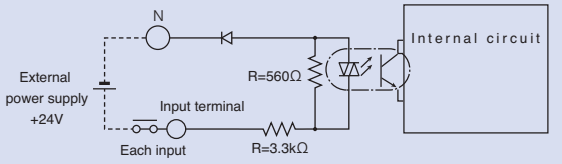


PNP specification

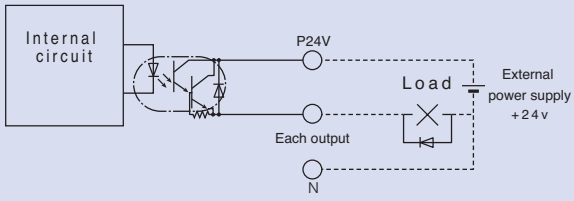


## Explanation of I/O Functions

The ASEL controller lets you select either the “program mode” in which the actuator is operated by programs input to the controller, or the “positioner mode” in which the actuator moves to the positions specified by PLC signals received from the host. The positioner mode provides the following five input patterns each supporting different applications.

### ■ Controller Functions by Type

| Operation mode | | Features |
|---|---|---|
| Program mode | | Various operations including linear/arc interpolation operation, path operation ideal for coating processes, etc., arch-motion operation and palletizing operation can be performed using the Super SEL language that lets you program complex control actions using simple commands. |
| Positioner mode | Standard mode | A basic operation mode in which a position number is specified and then a start signal is input to start operation. Push-motion operation and 2-axis linear interpolation operation are also supported. |
| | Product-type switchover mode | Multiple works of the same shape with slightly different hole positions can be handled using movement commands to the same position numbers by simply changing the product type number. |
| | 2-axis independent mode | With a 2-axis controller, each axis can be commanded and operated separately. |
| | Teaching mode | The slider (rod) can be moved via an external signal to store the achieved position as position data. |
| | DS-S-C1 compatible mode | If you were using a DS-S-C1 controller before, you can replace it with a PSEL controller without having to change the host programs. * This mode does not ensure actuator compatibility. |

## Explanation of I/O Functions

### Program mode

| Pin number | Category | Port number | Program mode | Function |
|---|---|---|---|---|
| 1A | P24 | | 24-V input | Connect 24V. |
| 1B | Input | 016 | Program No. 1 selection | These signals are used to select the program to be started. (BCD input using ports 016 to 022) |
| 2A | | 017 | Program No. 2 selection | |
| 2B | | 018 | Program No. 4 selection | |
| 3A | | 019 | Program No. 8 selection | |
| 3B | | 020 | Program No. 10 selection | |
| 4A | | 021 | Program No. 20 selection | |
| 4B | | 022 | Program No. 48 selection | |
| 5A | | 023 | CPU reset | This signal is used to reset the system to create the same condition after power reconnection. |
| 5B | | 000 | Start | This signal is used to start the program selected by port Nos. 016 to 022. |
| 6A | | 001 | General-purpose input | These signals are used with a program command to wait for external input. |
| 6B | | 002 | General-purpose input | |
| 7A | | 003 | General-purpose input | |
| 7B | | 004 | General-purpose input | |
| 8A | | 005 | General-purpose input | |
| 8B | | 006 | General-purpose input | |
| 9A | | 007 | General-purpose input | |
| 9B | | 008 | General-purpose input | |
| 10A | | 009 | General-purpose input | |
| 10B | | 010 | General-purpose input | |
| 11A | | 011 | General-purpose input | |
| 11B | | 012 | General-purpose input | |
| 12A | | 013 | General-purpose input | |
| 12B | | 014 | General-purpose input | |
| 13A | | 015 | General-purpose input | |
| 13B | Output | 300 | Alarm | This signal is output upon an alarm. (Contact B) |
| 14A | | 301 | Ready | This signal is output once the controller has started properly and entered a ready state. |
| 14B | | 302 | General-purpose output | These signals can be turned ON/OFF freely using program commands. |
| 15A | | 303 | General-purpose output | |
| 15B | | 304 | General-purpose output | |
| 16A | | 305 | General-purpose output | |
| 16B | | 306 | General-purpose output | |
| 17A | | 307 | General-purpose output | |
| 17B | N | | 0-V input | Connect 0V. |

Wiring diagram

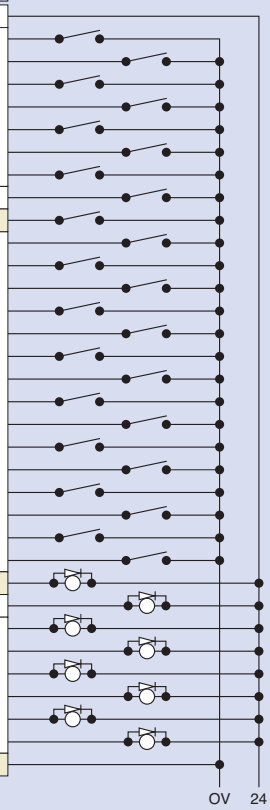


### Positioner, Standard Mode

| Pin number | Category | Port number | Positioner, standard mode | Function |
|---|---|---|---|---|
| 1A | P24 | | 24-V input | Connect 24V. |
| 1B | Input | 016 | Position input 10 | Port Nos. 007 to 019 are used to specify a target position number. Numbers can be specified either as BCD or binary codes. |
| 2A | | 017 | Position input 11 | |
| 2B | | 018 | Position input 12 | |
| 3A | | 019 | Position input 13 | |
| 3B | | 020 | - | - |
| 4A | | 021 | - | - |
| 4B | | 022 | - | - |
| 5A | | 023 | Error reset | This signal is used to reset minor errors. (The power must be reconnected to reset serious errors.) |
| 5B | | 000 | Start | This signal is used to cause the actuator to start moving to the selected position. |
| 6A | | 001 | Home return | This signal is used to perform home return. |
| 6B | | 002 | Servo ON | This signal is used to switch the servo on/off. |
| 7A | | 003 | Push | This signal is used to perform push-motion operation. |
| 7B | | 004 | Pause | When this signal is turned OFF while the actuator is moving, the actuator will pause. When the signal is turned ON, the actuator will resume and complete the remaining operation. |
| 8A | | 005 | Cancellation | When this signal is turned OFF while the actuator is moving, the actuator will stop and the remaining operation will be cancelled. |
| 8B | | 006 | Interpolation setting | With a 2-axis specification, turning ON this signal causes the actuator to move via linear interpolation. |
| 9A | | 007 | Position input 1 | Port Nos. 007 to 019 are used to specify a target position number. Numbers can be specified either as BCD or binary codes. |
| 9B | | 008 | Position input 2 | |
| 10A | | 009 | Position input 3 | |
| 10B | | 010 | Position input 4 | |
| 11A | | 011 | Position input 5 | |
| 11B | | 012 | Position input 6 | |
| 12A | | 013 | Position input 7 | |
| 12B | | 014 | Position input 8 | |
| 13A | | 015 | Position input 9 | |
| 13B | Output | 300 | Alarm | This signal is output upon an alarm. (Contact B) |
| 14A | | 301 | Ready | This signal is output once the controller has started properly and entered a ready state. |
| 14B | | 302 | Position complete | This signal is output upon completion of movement to the specified position. |
| 15A | | 303 | Home return complete | This signal is output upon completion of home return. |
| 15B | | 304 | Servo ON output | This signal is output while the servo is on. |
| 16A | | 305 | Push motion complete | This signal is output upon completion of push-motion operation. |
| 16B | | 306 | System-memory backup battery error | This signal is output when the system-memory backup battery voltage has dropped (to the warning level). |
| 17A | | 307 | Absolute-data backup battery error | This signal is output when the absolute-data backup battery voltage has dropped (to the warning level). |
| 17B | N | | 0-V input | Connect 0V. |

Wiring diagram

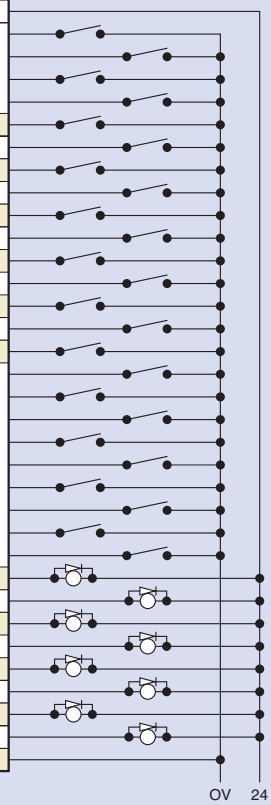

## Explanation of I/O Functions

### Positioner, Product-Type Switchover Mode

| Pin number | Category | Port number | Positioner, standard mode | Function |
|---|---|---|---|---|
| 1A | P24 | | 24-V input | Connect 24V. |
| 1B | Input | 016 | Position/product type input 10 | Port Nos. 007 to 022 are used to specify a target position number and a product type number. Position numbers and product type numbers are assigned by parameter settings. Numbers can be specified either as BCD or binary codes. |
| 2A | | 017 | Position/product type input 11 | |
| 2B | | 018 | Position/product type input 12 | |
| 3A | | 019 | Position/product type input 13 | |
| 3B | | 020 | Position/product type input 14 | |
| 4A | | 021 | Position/product type input 15 | |
| 4B | | 022 | Position/product type input 16 | |
| 5A | | 023 | Error reset | This signal is used to reset minor errors. (The power must be reconnected to reset serious errors |
| 5B | | 000 | Start | This signal is used to cause the actuator to start moving to the selected position. |
| 6A | | 001 | Home return | This signal is used to perform home return. |
| 6B | | 002 | Servo ON | This signal is used to switch the servo on/off. |
| 7A | | 003 | Push | This signal is used to perform push-motion operation. |
| 7B | | 004 | Pause | When this signal is turned OFF while the actuator is moving, the actuator will pause. When the signal is turned ON, the actuator will resume and complete the remaining operation. |
| 8A | | 005 | Cancellation | When this signal is turned OFF while the actuator is moving, the actuator will stop and the remaining operation will be cancelled. |
| 8B | | 006 | Interpolation setting | With a 2-axis specification, turning ON this signal causes the actuator to move via linear interpolation. |
| 9A | | 007 | Position/product type input 1 | Port Nos. 007 to 022 are used to specify a target position number and a product type number. Position numbers and product type numbers are assigned by parameter settings. Numbers can be specified either as BCD or binary codes. |
| 9B | | 008 | Position/product type input 2 | |
| 10A | | 009 | Position/product type input 3 | |
| 10B | | 010 | Position/product type input 4 | |
| 11A | | 011 | Position/product type input 5 | |
| 11B | | 012 | Position/product type input 6 | |
| 12A | | 013 | Position/product type input 7 | |
| 12B | | 014 | Position/product type input 8 | |
| 13A | | 015 | Position/product type input 9 | |
| 13B | Output | 300 | Alarm | This signal is output upon an alarm. (Contact B) |
| 14A | | 301 | Ready | This signal is output once the controller has started properly and entered a ready state. |
| 14B | | 302 | Position complete | This signal is output upon completion of movement to the specified position. |
| 15A | | 303 | Home return complete | This signal is output upon completion of home return. |
| 15B | | 304 | Servo ON output | This signal is output while the servo is on. |
| 16A | | 305 | Push motion complete | This signal is output upon completion of push-motion operation. |
| 16B | | 306 | System-memory backup battery error | This signal is output when the system-memory backup battery voltage has dropped (to the warning level). |
| 17A | | 307 | Absolute-data backup battery error | This signal is output when the absolute-data backup battery voltage has dropped (to the warning level). |
| 17B | N | | 0-V input | Connect 0V. |

Wiring diagram

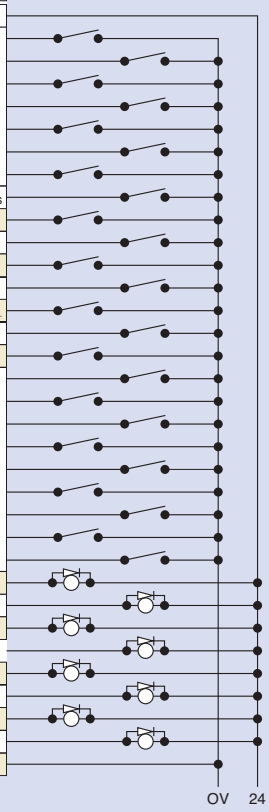


### Positioner, 2-axis Independent Mode

| Pin number | Category | Port number | Positioner, standard mode | Function |
|---|---|---|---|---|
| 1A | P24 | | 24-V input | Connect 24V. |
| 1B | Input | 016 | Position input 10 | Port Nos. 010 to 022 are used to specify a target position number. Position numbers for axis 1 and those for axis 2 are assigned by parameter settings. Numbers can be specified either as BCD or binary codes. |
| 2A | | 017 | Position input 11 | |
| 2B | | 018 | Position input 12 | |
| 3A | | 019 | Position input 13 | |
| 3B | | 020 | Position input 14 | |
| 4A | | 021 | Position input 15 | |
| 4B | | 022 | Position input 16 | |
| 5A | | 023 | Error reset | This signal is used to reset minor errors. (The power must be reconnected to reset serious errors.) |
| 5B | | 000 | Start 1 | This signal is used to cause the actuator to start moving to the selected position. |
| 6A | | 001 | Home return 1 | This signal is used to move axis 1 to the home. |
| 6B | | 002 | Servo ON 1 | This signal is used to switch on/off the servo for axis 1. |
| 7A | | 003 | Pause 1 | This signal is used to perform push-motion operation with axis 1. |
| 7B | | 004 | Cancellation 1 | This signal is used to cancel the movement of axis 1. |
| 8A | | 005 | Start 2 | This signal is used to cause axis 2 to start moving to the selected position. |
| 8B | | 006 | Home return 2 | This signal is used to move axis 2 to the home. |
| 9A | | 007 | Servo ON 2 | This signal is used to switch on/off the servo for axis 2. |
| 9B | | 008 | Pause 2 | This signal is used to perform push-motion operation with axis 2. |
| 10A | | 009 | Cancellation 2 | This signal is used to cancel the movement of axis 2. |
| 10B | | 010 | Position input 1 | Port Nos. 010 to 022 are used to specify a target position number. Position numbers for axis 1 and those for axis 2 are assigned by parameter settings. Numbers can be specified either as BCD or binary codes. |
| 11A | | 011 | Position input 2 | |
| 11B | | 012 | Position input 3 | |
| 12A | | 013 | Position input 4 | |
| 12B | | 014 | Position input 5 | |
| 13A | | 015 | Position input 6 | |
| 13B | Output | 300 | Alarm | This signal is output upon an alarm. (Contact B) |
| 14A | | 301 | Ready | This signal is output once the controller has started properly and entered a ready state. |
| 14B | | 302 | Position complete 1 | This signal is output upon completion of movement of axis 1 to the specified position. |
| 15A | | 303 | Home return complete 1 | This signal is output upon completion of home return of axis 1. |
| 15B | | 304 | Position complete 2 | This signal is output while the servo for axis 1 is on. |
| 16A | | 305 | Position complete 2 | This signal is output upon completion of movement of axis 2 to the specified position. |
| 16B | | 306 | Servo ON output 2 | This signal is output upon completion of home return of axis 2. |
| 17A | | 307 | 0-V input | This signal is output while the servo for axis 2 is on. |
| 17B | N | | | Connect 0V. |

Wiring diagram

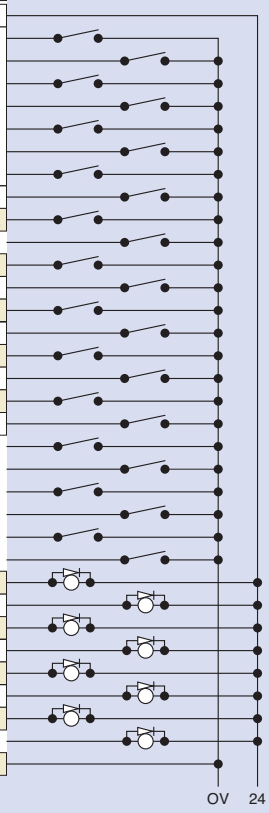

## Explanation of I/O Functions

### Positioner, Teaching Mode

| Pin number | Category | Port number | Positioner, standard mode | Function |
|---|---|---|---|---|
| 1A | P24 | | 24-V input | Connect 24V. |
| 1B | Input | 016 | Axis 1 JOG- | While this signal is input, axis 1 moves in the negative direction. |
| 2A | | 017 | Axis 2 JOG+ | While this signal is input, axis 2 moves in the positive direction. |
| 2B | | 018 | Axis 2 JOG- | While this signal is input, axis 2 moves in the negative direction. |
| 3A | | 019 | Inching specification (0.01mm) | These signals are used to specify an inching travel distance. (The travel distance is the sum of values specified by port Nos. 019 to 022.) |
| 3B | | 020 | Inching specification (0.1mm) | |
| 4A | | 021 | Inching specification (0.5mm) | |
| 4B | | 022 | Inching specification (1mm) | |
| 5A | | 023 | Error reset | This signal is used to reset minor errors. (The power must be reconnected to reset serious errors.) |
| 5B | | 000 | Start | This signal is used to cause the actuator to start moving to the selected position. |
| 6A | | 001 | Servo ON | This signal is used to switch the servo on/off. |
| 6B | | 002 | Pause | When this signal is turned OFF while the actuator is moving, the actuator will pause. When the signal is turned ON, the actuator will resume and complete the remaining operation. |
| 7A | | 003 | Position input 1 | Port Nos. 003 to 013 are used to specify a target position number and a position number under which to input the current position. When the teaching mode specification signal at port No. 014 is ON, the current value will be written under the specified position number upon turning ON of the start signal at port No. 000. |
| 7B | | 004 | Position input 2 | |
| 8A | | 005 | Position input 3 | |
| 8B | | 006 | Position input 4 | |
| 9A | | 007 | Position input 5 | |
| 9B | | 008 | Position input 6 | |
| 10A | | 009 | Position input 7 | |
| 10B | | 010 | Position input 8 | |
| 11A | | 011 | Position input 9 | |
| 11B | | 012 | Position input 10 | |
| 12A | | 013 | Position input 11 | |
| 12B | | 014 | Teaching mode specification | |
| 13A | | 015 | Axis 1 JOG+ | While this signal is input, axis 1 moves in the negative direction. |
| 13B | Output | 300 | Alarm | This signal is output upon an alarm. (Contact B) |
| 14A | | 301 | Ready | This signal is output once the controller has started properly and entered a ready state. |
| 14B | | 302 | Position complete | This signal is output upon completion of movement to the specified position. |
| 15A | | 303 | Home return complete | This signal is output upon completion of home return. |
| 15B | | 304 | Servo ON output | This signal is output while the servo is on. |
| 16A | | 305 | - | - |
| 16B | | 306 | System-memory backup battery error | This signal is output when the system-memory backup battery voltage has dropped (to the warning level). |
| 17A | | 307 | Absolute-data backup battery error | This signal is output when the absolute-data backup battery voltage has dropped (to the warning level). |
| 17B | N | | 0-V input | Connect 0V. |

Wiring diagram

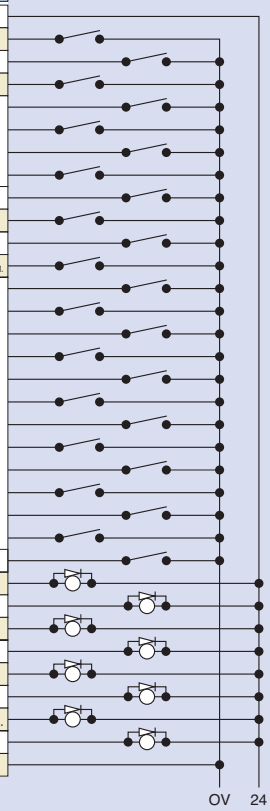


### Positioner, DS-S-C1 Compatible Mode

| Pin number | Category | Port number | Positioner, standard mode | Function |
|---|---|---|---|---|
| 1A | P24 | | 24-V input | Connect 24V. |
| 1B | Input | 016 | Position No.1000 | (Same as port Nos. 004 to 015) |
| 2A | | 017 | – | – |
| 2B | | 018 | – | – |
| 3A | | 019 | – | – |
| 3B | | 020 | – | – |
| 4A | | 021 | – | – |
| 4B | | 022 | – | – |
| 5A | | 023 | CPU reset | This signal is used to reset the system to create the same condition after power reconnection. |
| 5B | | 000 | Start | This signal is used to cause the actuator to start moving to the selected position.T |
| 6A | | 001 | Hold (pause) | When this signal is turned OFF while the actuator is moving, the actuator will pause. When the signal is turned ON, the actuator will resume and complete the remaining operation. |
| 6B | | 002 | Cancellation | When this signal is turned OFF while the actuator is moving, the actuator will stop and the remaining operation will be cancelled. |
| 7A | | 003 | Interpolation setting | With a 2-axis specification, turning ON this signal causes the actuator to move via linear interpolation. |
| 7B | | 004 | Position No.1 | Port Nos. 004 to 016 are used to specify a target position number. Numbers can be specified either as BCD or binary codes. |
| 8A | | 005 | Position No.2 | |
| 8B | | 006 | Position No.4 | |
| 9A | | 007 | Position No.8 | |
| 9B | | 008 | Position No.10 | |
| 10A | | 009 | Position No.20 | |
| 10B | | 010 | Position No.40 | |
| 11A | | 011 | Position No.80 | |
| 11B | | 012 | Position No.100 | |
| 12A | | 013 | Position No.200 | |
| 12B | | 014 | Position No.400 | |
| 13A | | 015 | Position No.800 | |
| 13B | Output | 300 | Alarm | This signal is output upon an alarm. (Contact A) |
| 14A | | 301 | Ready | This signal is output once the controller has started properly and entered a ready state. |
| 14B | | 302 | Position complete | This signal is output upon completion of movement to the specified position. |
| 15A | | 303 | – | – |
| 15B | | 304 | – | – |
| 16A | | 305 | – | – |
| 16B | | 306 | System-memory backup battery error | This signal is output when the system-memory backup battery voltage has dropped (to the warning level). |
| 17A | | 307 | Absolute-data backup battery error | This signal is output when the absolute-data backup battery voltage has dropped (to the warning level). |
| 17B | N | | 0-V input | Connect 0V. |

Wiring diagram

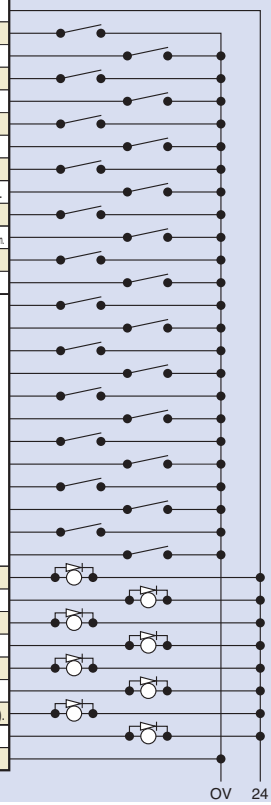

## Specification Table

| | Item | Specification |
|---|---|---|
| Basic specifications | Connectable actuators | RCA series actuator |
| | Input power supply | DC24V ±10% |
| | Power-supply capacity | Control power: 1.2A max.<br>Motor power: Rating 1.7A / Peak 5A (per axis) |
| | Dielectric strength voltage | 500VDC, 10MΩ or above |
| | Breakdown resistance | 500VAC, 1 minute |
| | Rush current | 30A max. |
| | Vibration resistance | XYZ directions One-side amplitude 0.035 mm (continuous), 0.075 ç<br>4.9m/s2 (continuous), 0.8m/s2 (continuous) |
| Control specifications | Number of controlled axes | 1 axis/2 axes |
| | Maximum total output of connected axes | 60W (30W+30W) |
| | Position detection method | Incremental encoder / Absolute encoder |
| | Speed setting | From 1mm/s. The maximum limit varies depending on the actuator. |
| | Acceleration setting | From 0.01G. The maximum limit varies depending on the actuator. |
| | Operation method | Program operation / Positioner operation (switchable) |
| Program | Programming language | Super SEL language |
| | Number of programs | 64 programs |
| | Number of program steps | 2,000 steps |
| | Number of multi-tasking programs | 8 programs |
| | Number of positioning points | 1,500 points |
| | Data storage device | Flash ROM (A system-memory backup battery can be added as an option) |
| | Data input method | Teaching pendant or PC software |
| Communication | Number of I/O points | 24 input points / 8 output points (NPN or PNP selectable) |
| | I/O power supply | Externally supplied 24VDC ± 10% |
| | PIO cable | CB-DS-PIO□□□(supplied with the controller) |
| | Serial communication function | RS232C (D-sub, half-pitch connector) / USB connector |
| | Field network | (To be supported in the future) |
| | Motor cable | CB-ACS-MA□□□(20m max.) |
| | Encoder cable | CB-ACS-PA□□□(20m max.) |
| General specifications | Protective functions | Motor overcurrent, motor driver temperature check, overload check, encoder open-circuit check, soft limit over, system error, battery error, etc. |
| | Ambient operating temperature, humidity | 0~40ºC 10~95% (non-condensing) |
| | Operating ambience | Free from corrosive gases. In particular, there shall be no significant powder dust. |
| | Protection class | IP20 |
| | Weight | Approx. 450g |
| | External dimensions | 43mm (W) ×159mm (H) ×110mm (D) |

## External Dimensions

ASEL 1-axis controller

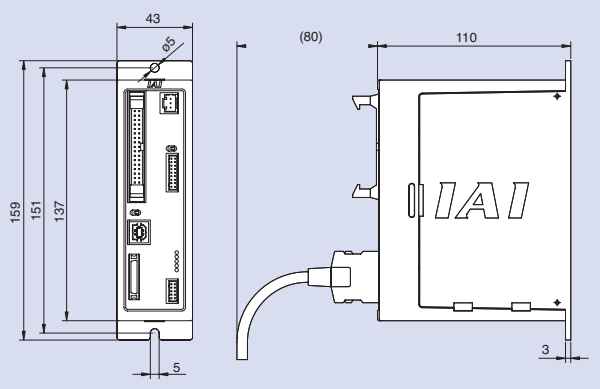


ASEL 2-axis controller

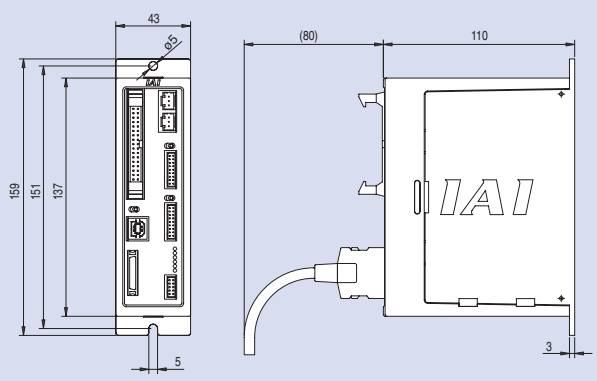

## Name of Each Part

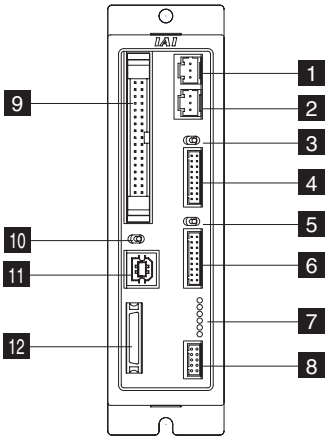


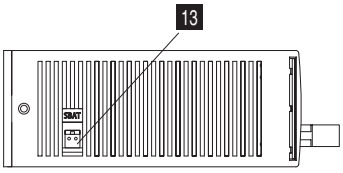


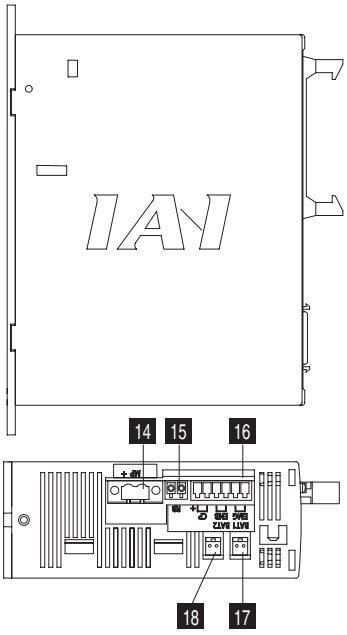


### 1 Motor connector for axis 1

Connect the motor cable of the axis 1 actuator.

### 2 Motor connector for axis 2

Connect the motor cable of the axis 2 actuator.

### 3 Brake switch for axis 1

This switch is used to release the axis brake. Setting it to the left position (RLS side) forcibly releases the brake, while setting it to the right position (NOM side) causes the controller to automatically control the brake.

### 4 Encoder connector for axis 1

Connect the encoder cable of the axis 1 actuator.

### 5 Brake switch for axis 2

This switch is used to release the axis brake. Setting it to the left position (RLS side) forcibly releases the brake, while setting it to the right position (NOM side) causes the controller to automatically control the brake.

### 6 Encoder connector for axis 2

Connect the encoder cable of the axis 2 actuator.

### 7 Status indicator LEDs

These LEDs are used to indicate the operating condition of the controller.

Indication details are as follows:

PWR:This LED indicates that the controller is receiving power.

RDY:This LED indicates that the controller is ready to perform program operation.

ALM:This LED indicates that the controller is abnormal.

EMG:This LED indicates that an emergency stop is actuated and the drive source is cut off.

SV1:This LED indicates that the axis 1 actuator servo is on.

SV2:This LED indicates that the axis 2 actuator servo is on.

### 8 Panel unit connector

A connector for the panel unit (optional) that displays the controller status and error numbers.

### 9 I/O connector

A connector for interface I/Os.

A 34-pin flat connector is used for the DIO (24 IN/8 OUT) interface.

The I/O power is also supplied to the controller through this connector (pins 1 and 34).

### 10 Mode switch

This switch is used to specify the running mode of the controller. The left position indicates the MANU (manual operation) mode, while the right position indicates the AUTO (automatic operation) mode. Teaching can only be performed as manual operation, and automatic operation using external I/Os is not possible in the MANU mode.

### 11 USB connector

A connector for PC connection via USB. If the USB connector is connected, the TP connector is disabled and all communication inputs to the TP connector are cut off.

### 12 Teaching pendant (TP) connector

A half-pitch I/O 26-pin connector that connects a teaching pendant when the running mode is MANU. A special conversion cable is needed to connect a conventional D-sub, 25-pin connector.

### 13 System-memory backup battery connector

If you wish to retain the various data recorded in the SRAM of the controller even after the power is cut off, connect the necessary battery to this connector.

This battery is installed externally to the unit. The controller does not come standard with the battery (it must be specified as an option).

### 14 Motor power input connector

This connector is used to input the motor power. It consists of a 2-pin, 2-piece connector by Phoenix Contact.

### 15 External regenerative resistor connector

A connector for the regenerative resistor that must be connected when the built-in regenerative resistor alone does not offer sufficient capacity in high-acceleration/high-load operation, etc.

Whether or not an external regenerative resistor is necessary depends on the conditions of your specific application such as the axis configuration.

### 16 Control power/system input connector

This connector is used to connect the control power input, emergency stop switch, and enable switch.

It consists of a 6-pin, 2-piece connector by Phoenix Contact.

### 17 Absolute-data backup battery connector for axis 1

A connector for the battery that backs up absolute data when the actuator uses an absolute encoder. Secure installation of the battery is the customer's responsibility.

### 18 Absolute-data backup battery connector for axis 2

A connector for the battery that backs up absolute data when the actuator uses an absolute encoder. Secure installation of the battery is the customer's responsibility.

## Options

# Teaching pendant

### Features

A teaching device providing program/position input function, test operation function, monitoring function, and more.

IA-T-X/XD

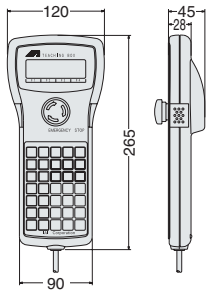


IA-T-XA

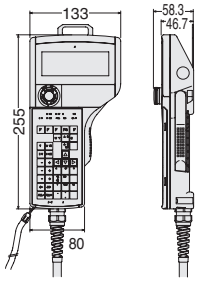


### Model

| Model | Description |
|---|---|
| IA-T-X-J | Standard type with connector conversion cable |
| IA-T-X | Standard type |
| IA-T-XD-J | Deadman switch type with connector conversion cable |
| IA-T-XD | Deadman switch type |
| IA-T-XA-J | ANSI type with connector conversion cable |
| IA-T-XA | ANSI type |

### Configuration

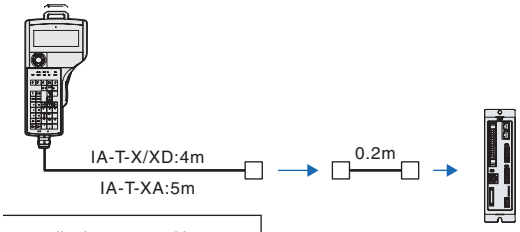


Conversion cable:CB-SEL-SJ002

NOTE
The PSEL controller is supported by version 1.40 or later (or 1.30 or later with the ANSI type).

### Specifications

| Item | IA-T-X/XD | IA-T-XA |
|---|---|---|
| Ambient operating temperature, humidity | Temperature 0~40°C, Humidity 85% RH or below | |
| Operating ambience | Free from corrosive gases. In particular, there shall be no significant powder dust. | Protective structure conforming to IP54 |
| Weight | Approx. 650g | Approx. 600g (excluding cable) |
| Cable length | 4m | 5m |
| Display | LCD with 20 characters x 4 lines | LCD with 32 characters x 8 lines |

# PC Software (Windows Only)

### Features

A startup support software program offering program/position input function, test operation function, monitoring function, and more. The functions needed for debugging have been enhanced to help reduced the startup time.

### Model

**IA-101-X-MW-J (with RS232C Cable + Connector Conversion Cable)**

### Configuration

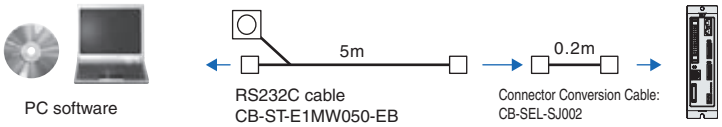


NOTE
The SSEL controller is supported by version 7.0.0.0 or later.

### Model

**IA-101-X-USB (with USB Cable)**

### Configuration

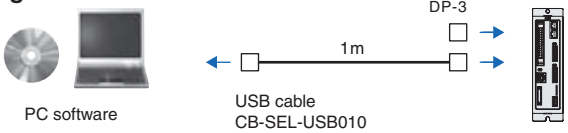

# Options

## Panel Unit

**Features** A display for checking controller error codes and active program numbers.

**Model** **PU-1** (Cable Length 3m)

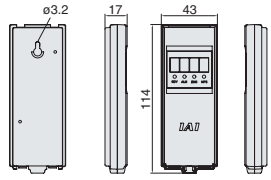


## Absolute-Data Backup Battery

**Features** This battery backs up absolute data when an absolute-type actuator is operated. Same as the system-memory backup battery.

**Model** **AB-5**

## System-Memory Backup Battery

**Features** If your programs use global flags, etc., you need this battery to retain data even after the power is turned off.

**Model** **AB-5-CS (with Case)**
**AB-5 (Battery Only)**

## Dummy plug

**Features** When connecting your SSEL controller to a PC using a USB cable, install this plug on the teaching port to cut off the enable circuit. (This plug comes with the PC software IA-101-X-USB.)

**Model** **DP-3**

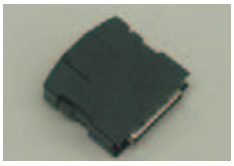

## USB cable

**Features** Use this cable to connect your controller with USB port to a PC.
If your controller has no USB port (XSEL), connect a RS232C cable to a USB cable via a USB conversion adapter and connect the USB cable to the USB port on the PC.
(Refer to the PC software IA-101-X-USBMW.)

**Model** **CB-SEL-USB010** (Cable Length 1m)

## Connector conversion cable

**Features** This conversion cable is used to connect a D-sub, 25-pin connector for teaching pendant or PC software to the teaching connector (half-pitch) on the ASEL controller.

**Model** **CB-SEL-SJ002** (Cable Length 0.2m)

# Spare Parts

Should you require spare parts after the purchase of your product for replacing the original cables, etc., refer to the model names specified below.

## Motor Cable

**Model CB-ACS-MA□□□**

* The standard motor cable is a robot cable.

* □□□ indicates the cable length (L). Lengths up to 20 m can be specified.
Example) 080 = 8 m

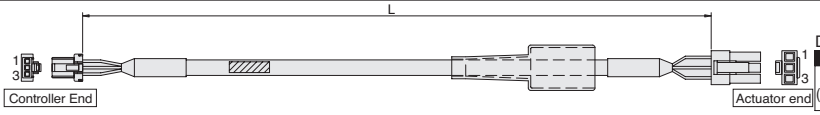


DF1E-3S-2.5C

| Wire | Color | Signal | No. |
|---|---|---|---|
| AWG22 (crimped) | Red | U | 1 |
| | White | V | 2 |
| | Black | W | 3 |

SLP-03V

| No. | Signal | Color | Wire |
|---|---|---|---|
| 1 | U | Red | AWG22 (crimped) |
| 2 | V | White | |
| 3 | W | Black | |

## Encoder Cable/ Encoder Robot Cable

**Model CB-ACS-PA□□□ / CB-ACS-PA□□□ -RB**

* The standard encoder cable is a normal cable
A robot cable can be specified as an option.

* □□□ indicates the cable length (L). Lengths up to 20 m can be specified.
Example) 080 = 8 m

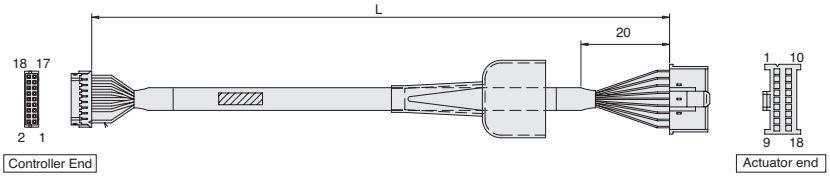


PHDR-18VR

| Wire | Color | Signal | No. |
|---|---|---|---|
| AWG26 (crimped) | White/purple | LS+ | 18 |
| | White/gray | LS- | 17 |
| | Yellow | BK+ | 16 |
| | Blue | BK- | 15 |
| | White/blue | A+ | 14 |
| | White/yellow | A- | 13 |
| | White/red | B+ | 12 |
| | White/black | B- | 11 |
| | Orange | SD/Z+ | 10 |
| | Green | SD/Z- | 9 |
| | Purple | BAT+ | 8 |
| | Gray | BAT- | 7 |
| | Red | VCC | 6 |
| | Black | GND | 5 |
| | - | - | 4 |
| | - | - | 3 |
| | - | - | 2 |
| | Drain | FG | 1 |

XMP-18V

| No. | Signal ABZ | Signal Serial | Color | Wire |
|---|---|---|---|---|
| 1 | A+ | - | White/blue | AWG26 (crimped) |
| 2 | A- | - | White/yellow | |
| 3 | B+ | - | White/red | |
| 4 | B- | - | White/black | |
| 5 | - | - | - | |
| 6 | - | - | - | |
| 7 | LS+ | LS+ | White/purple | |
| 8 | - | - | - | |
| 9 | FG | FG | Drain | |
| 10 | Z+ | SD+ | Orange | |
| 11 | Z- | SD- | Green | |
| 12 | - | BAT+ | Purple | |
| 13 | /PS | BAT- | Gray | |
| 14 | VCC | VCC | Red | |
| 15 | GND | GND | Black | |
| 16 | LS- | LS- | White/gray | |
| 17 | BK- | BK- | Blue | |
| 18 | BK+ | BK+ | Yellow | |

("White/blue" and other designations under "Wire color" indicate the band color/insulator color.)

Drain wire and braided shield wire

## I/O Flat Cable

**Model CB-DS-PIO□□□**

* □□□ indicates the cable length (L). Lengths up to 20 m can be specified.
Example) 080 = 8 m

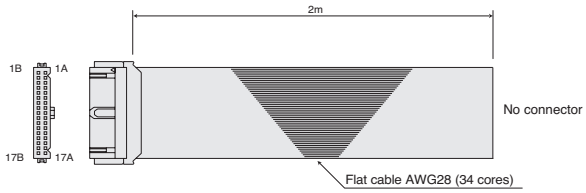


| No. | Color | Wire | No. | Color | Wire |
|---|---|---|---|---|---|
| 1A | Brown1 | Flat cable pressure -welded | 9B | Gray2 | Flat cable pressure -welded |
| 1B | Red1 | | 10A | White2 | |
| 2A | Orange1 | | 10B | Black2 | |
| 2B | Yellow1 | | 11A | Brown-3 | |
| 3A | Green1 | | 11B | Red3 | |
| 3B | Blue1 | | 12A | Orange3 | |
| 4A | Purple1 | | 12B | Yellow3 | |
| 4B | Gray1 | | 13A | Green3 | |
| 5A | White1 | | 13B | Blue3 | |
| 5B | Black1 | | 14A | Purple3 | |
| 6A | Brown-2 | | 14B | Gray3 | |
| 6B | Red2 | | 15A | White3 | |
| 7A | Orange2 | | 15B | Black3 | |
| 7B | Yellow2 | | 16A | Brown-4 | |
| 8A | Green2 | | 16B | Red4 | |
| 8B | Blue2 | | 17A | Orange4 | |
| 9A | Purple2 | | 17B | Yellow4 | |

**RCA Series**
**Extract Cat. No. 0307-E**

The information contained in this catalog is subject to change without notice for the pupose of product inprovement

ISO 9001

Providing quality products since 1986

Quality and Innovation


**IAI Industrieroboter GmbH**
Ober der Röth 4
D-65824 Schwalbach / Frankfurt
Germany
Tel.:+49-6196-8895-0
Fax:+49-6196-8895-24
E-Mail: info@IAI-GmbH.de
Internet: http://www.eu.IAI-GmbH.de

**IAI America Inc.**
2690 W. 237th Street, Torrance, CA 90505, U.S.A
Tel.: +1-310-891-6015 Fax: +1-310-891-0815

**IAI CORPORATION**
645-1 Shimizu Hirose, Shizuoka 424-0102, Japan
Tel.: +81-543-64-5105 Fax: +81-543-64-5182



IAI, the IAI-logo, RoboCylinder™, the RoboCylinder™-logo, IntelligentActuator™ and the IntelligentActuator™-logo are trademarks or productnames of IAI Corporation or of the subsidiaries in USA or Germany